# RBS 80 - MULTIPLEX BOP CONTROL SYSTEM

CAMERON CONTROLS

3169

Exhibit No. _____

Worldwide Court Reporters, Inc.

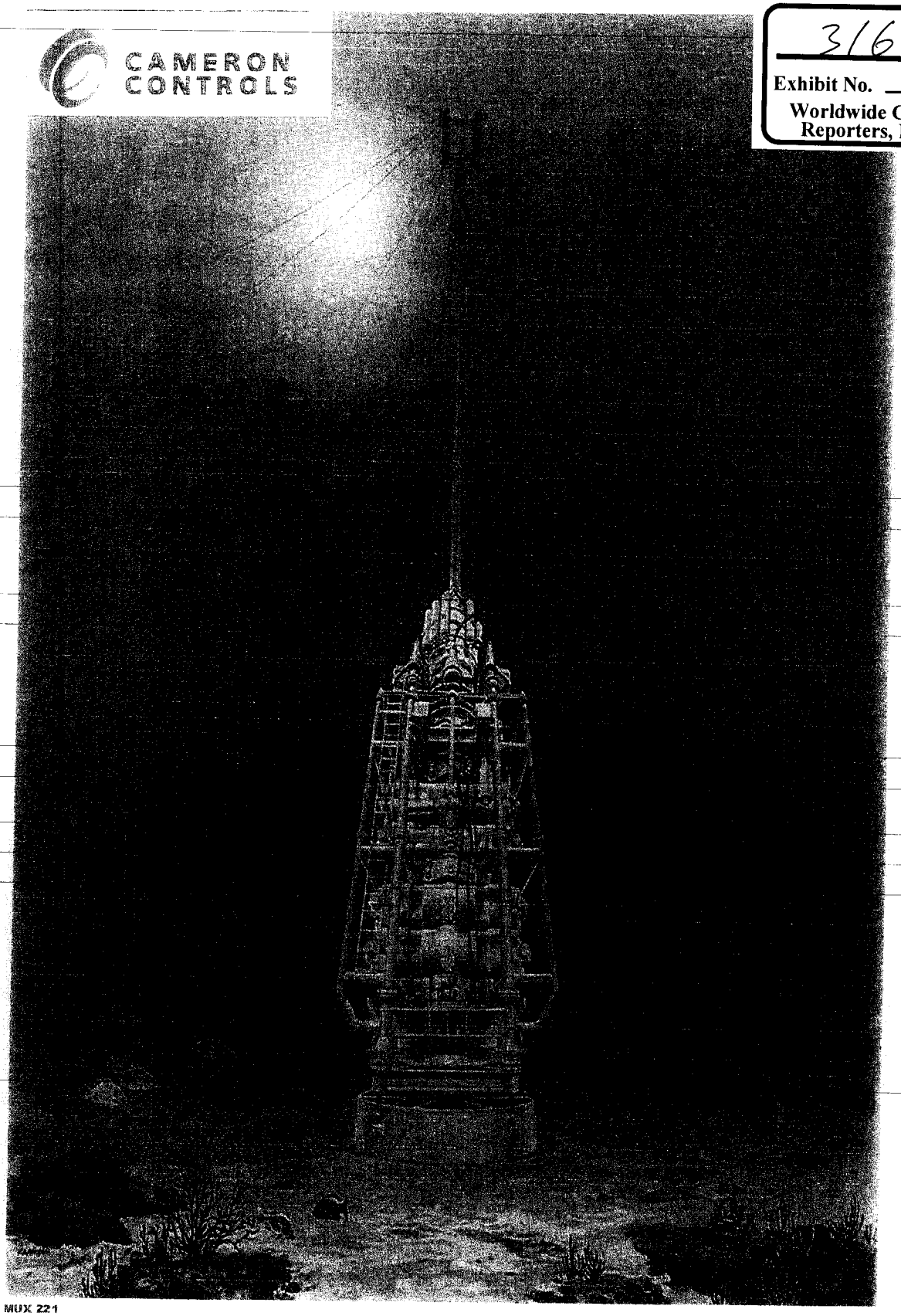

MUX 221

Confidential Treatment Requested by Transocean Holdings LLC

TRN-HCEC-00002062

CONFIDENTIAL

TRN-MDL-00043799

CAMERON

IN
LS

# HOSE REEL HOT LINE

BOM

2020702-21

087
HORIZON

136
Volume 3

This book is a part of the
CER Library
Do Not Remove

CAMERON CONTROLS

# CONTENTS OF THE MANUAL

## R & B Falcon – DEEPWATER HORIZON


Volume 1 - System Manual, Maintenance
Valves & Regulators

Volume 2 - Cable Reel - Blue & Yellow

Volume 3 - Hot Line Hose Reel

Volume 4 - Drawings & Bill of Materials – HPU & POD

Volume 5 - Drawings & Bill of Materials - DCP & TCP

Volume 6 - Drawings & Bill of Materials

Volume 7 - Major Components & Spares

Volume 8 - Electronics – PEP





fidential Treatment Requested by Transocean Holdings LLC TRN-HCEC-00002064

CONFIDENTIAL TRN-MDL-00043801

CAMERON CONTROLS

# R & B Falcon
# · DEEPWATER HORIZON

All information contained in this manual is the exclusive property of Cooper Cameron Corporation, Cameron Control Division. Any reproduction or use of the calculations, drawings, photos, procedures or instructions, either expressed or implied, is forbidden without the written permission of Cooper Cameron Corporation, Cameron Control Division, or its authorized agent.

Documentation No. R & B Falcon - RBS 8D – CC001 REV. A01
Initial Release A01

June 2000

Copyright C 2000 All Rights Reserved
By
Cooper Cameron Corporation
Cameron Control Division



Confidential Treatment Requested by Transocean Holdings LLC TRN-HCEC-00002065

CONFIDENTIAL TRN-MDL-00043802

CAMERON CONTROLS

# VOLUME 3

## MULTIPLEX BOP CONTROL SYSTEM

fidential Treatment Requested by Transocean Holdings LLC TRN-HCEC-00002066

CONFIDENTIAL TRN-MDL-00043803

CAMERON CONTROLS

PROJECT R & B FALCON RBS-8D

* * * * * *

# OPERATIONS, MAINTENANCE AND DATA MANUAL

FOR

PO# 45524427

* * * * * *

HOTLINE HOSE REEL, BLUE
CAMERON P/N 2020988-02
PATCO P/N D43000-01
PATCO S/N 1168-13525-99-12

* * * * * *

MANUFACTURED BY

PATCO MACHINE & FAB., INC.
2002 HUMBLE WESTFIELD ROAD
HOUSTON, TEXAS 77073-2510
281-443-2837
U.S.A

PCN 13525

Confidential Treatment Requested by Transocean Holdings LLC TRN-HCEC-00002067

CONFIDENTIAL TRN-MDL-00043804

# OPERATIONS MAINTENANCE & DATA MANUAL

## TABLE OF CONTENTS


SAFETY PRECAUTIONS

PROPRIETARY NOTE

1.0 INTRODUCTION

2.0 SYSTEM DESCRIPTION

- 2.1 STRUCTURAL SYSTEM
- 2.2 DRIVE SYSTEM
- 2.3 PNEUMATIC SYSTEM
- 2.4 SYSTEM CONFIGURATION
- 2.5 SYSTEM SPECIFICATIONS

3.0 SYSTEM OPERATION

- 3.1 START UP
- 3.2 BRAKE OPERATION
- 3.3 REEL ROTATION

4.0 SYSTEM MAINTENANCE

- 4.1 HANDLING TECHNIQUES AND LIMITATIONS
- 4.2 OPERATING MAINTENANCE
- 4.3 RECOMMENDED SPARES
- 4.4 SYSTEM COATING SPECIFICATIONS
- 4.5 SHIPPING RECOMMENDATION
- 4.6 RECORD KEEPING

5.0 COMPONENT TECHNICAL DESCRIPTION

6.0 DESIGN CALCULATIONS

- 6.1 DESCRIPTION & DESIGN STATEMENTS
- 6.2 CODES AND STANDARDS





fidential Treatment Requested by Transocean Holdings LLC

TRN-HCEC-00002068

CONFIDENTIAL

TRN-MDL-00043805

OPERATIONS MAINTENANCE & DATA MANUAL

TABLE OF CONTENTS

7.0 MATERIAL TEST REPORTS & COATING CERTIFICATES

8.0 WELDING PROCEDURES & WELDER QUALIFICATIONS

9.0 NON-DESTRUCTIVE EXAM REPORTS & TECHNICIAN QUALIFICATIONS

10.0 SPECIAL TEST REPORTS



Confidential Treatment Requested by Transocean Holdings LLC

TRN-HCEC-00002069

CONFIDENTIAL

TRN-MDL-00043806

# *SAFETY PRECAUTIONS*

THE FOLLOWING SYMBOLS IN THIS MANUAL SIGNAL
POTENTIALLY DANGEROUS CONDITIONS TO THE OPERATOR
OR EQUIPMENT. READ THIS MANUAL CAREFULLY.
KNOW WHEN THESE CONDITIONS CAN EXIST.
TAKE NECESSARY STEPS TO PROTECT
PERSONNEL AS WELL AS EQUIPMENT

## *WARNING*

THIS SYSMOL IS USED TO WARN OF
POSSIBLE SERIOUS PERSONAL INJURY

## *CAUTION*

THIS SYMBOL REFERS TO POSSIBLE
EQUIPMENT DAMAGE



fidential Treatment Requested by Transocean Holdings LLC TRN-HCEC-00002070

CONFIDENTIAL TRN-MDL-00043807

# ***PROPRIETARY NOTE***

THIS *"OPERATIONS AND MAINTENANCE MANUAL"* HAS BEEN ISSUED FOR THE SOLE USE OF PROPER OPERATIONS AND MAINTENANCE OF THE PATCO 11,000 Ft. HOT LINE HOSE REEL.

THIS MANUAL SHOULD NOT BE DUPLICATED USED OR DISCLOSED IN WHOLE OR IN PART FOR ANY PURPOSE OTHER THAN OPERATIONS AND MAINTENANCE OF THE SUBJECT REEL.

THIS RESTRICTION DOES NOT LIMIT USERS RIGHT TO USE INFORMATION CONTAINED IN THIS MANUAL, IF IT IS OBTAINED FROM ANOTHER SOURCE.



Confidential Treatment Requested by Transocean Holdings LLC

TRN-HCEC-00002071

CONFIDENTIAL

TRN-MDL-00043808

Confidential Treatment Requested by Transocean Holdings LLC



CONFIDENTIAL

## 1.0 INTRODUCTION

This manual covers the detailed description and the required operations and maintenance tasks for the Patco P/N D43000-01, Cameron P/N 2020988-02, B.O.P. Blue Hot Line Hose Reel.

Whenever a **WARNING** and/or **CAUTION** is indicated, the operator must follow the required task(s) instructions in detail to prevent personal injury and/or component damage.

SECTION 2.0, SYSTEM DESCRIPTION, presents the basic description of the *Structural System*, *Drive System*, *Pneumatic System*, *System Configuration*, and *System Specifications*.

SECTION 3.0, SYSTEM OPERATION, presents the detailed methodology for *Start Up*, *Brake Operation*, and *Reel Rotation*.

SECTION 4.0, SYSTEM MAINTENANCE, reviews in detail the multiplex cable reel *Handling Techniques* and *Limitations*, and *Operating Maintenance*. A detailed *Recommended Spares* list is presented covering three levels of stocking spare parts:

Level I, Consumables
Level II, Repair Parts and/or Kits
Level III, Replacement Components

Also presented are the *System Coating Specifications*, *Shipping Recommendations*, and a suggested *Record Keeping* format.

SECTION 5.0, COMPONENT DESCRIPTION, and Appendix 1 thru 20 are detailed descriptions of all commercial components used on the Cable Reel. Additional vendor furnished Maintenance and Spare Parts information is included for the major/critical components.

SECTION 6.0, DESIGN CALCULATIONS, presents the parameters and engineering design calculations for the reel and pneumatic drive system.



Confidential Treatment Requested by Transocean Holdings LLC TRN-HCEC-00002073

CONFIDENTIAL TRN-MDL-00043810

fidential Treatment Requested by Transocean Holdings LLC



CONFIDENTIAL

# 2.0 SYSTEM DESCRIPTION

## 2.1 STRUCTURAL SYSTEM

The Patco P/N D43000-01, Cameron P/N 2020988-02, B.O.P. 11,000 ft. Blue Hot Line Hose Reel has been designed based on required operating characteristics and space limitations. The general system configuration for the Blue Reel is illustrated in Patco general assembly drawing D43000, Revision 1. Except for commercially purchased components, i.e. shafts, bearings, bolts, nuts, etc. the materials used for the construction of the Hose Reel were:

| | |
|---|---|
| ASTM A36 | Carbon Steel Plates and Structural Angles |
| ASTM A53B | Carbon Steel Standard Pipe |
| ASTM A500B | Carbon Steel Structural Tubing |
| ASTM A569 | Carbon Steel Rolled, Pickled & Oiled Sheet |



Confidential Treatment Requested by Transocean Holdings LLC TRN-HCEC-00002075

CONFIDENTIAL TRN-MDL-00043812

## 2.2 DRIVE SYSTEM

The drive system consists of a radial piston air motor and integral planetary gear reducer, (187:1 reduction ratio) directly connected to the reel drum flange.

The efficiencies of the drive system components were assumed to be:

| | |
|---|---|
| Output Shaft Assembly | 0.99 |
| Pillow Block Bearings | 0.99 |
| Planetary Reducer | 0.97 |

The total system efficiency from the air motor planetary gear reducer to the cable reel drum is:

Efficiency = (0.99) (0.99) (0.97) = 0.951

The manufacturers data on the radial piston air motor at 90 PSI air pressure is as follows:

| Condition | Power (H P) | Speed (R P M) | Torque (Ft-Lbs) |
|---|---|---|---|
| Max. Power | 8.5 | 1800 | 26 |
| Max. Starting Torque | - | - | 50 |
| Min. Starting Torque | - | - | 26 |
| Running Torque | - | 1800 | 25 |
| Running Torque | - | 600 | 37 |
| Max. Continuous RPM | - | 1800 | - |
| Max. Intermittent RPM | - | 2400 | - |

Air Consumption of 280 (cu.ft./min. free air) at 90 PSI and 1800 RPM
Air Consumption of 340 (cu.ft./min. free air) at 90 PSI and 2400 RPM

The manufacturers data on the planetary reducer is as follows:

| | |
|---|---|
| Max. Input Torque | 368 Ft-Lbs |
| Max. Output Torque | 9,934 Ft-Lbs |
| Max. Bearing Load | 13,488 Lbs |



fidential Treatment Requested by Transocean Holdings LLC TRN-HCEC-00002076

CONFIDENTIAL TRN-MDL-00043813

| | |
|---|---|
| Max. Static Disc Brake Torque | 184 Ft-Lbs |
| Planetary Reduction Ratio | 184.04:1 |

Based on the above data, the line pull and speed on a full reel with a pitch diameter of 98.34 inches and 90 PSI air pressure at the motor is as follows:

Maximum Reel Torque = (26) (184.04) (0.951) = 4,550 Ft.-Lbs.
Pitch Radius of Cable = 98.34/2 = 49.17 In./12 = 4.1 Ft.
Maximum Line Pull = 4,550 Ft.-Lbs./4.1 Ft. = 1,110 Lbs.

Line Pull to retrieve 300 Ft. of unsupported Cable at 1.07 Lbs./Ft.
(300) (1.07) = 321 Lbs.

API specifications for Cable Reels require a design torque of 1.5 times the torque required to retrieve the unsupported length of cable which is:

Design Torque = (321) (4.1) (1.5) = 1,974 Ft.-Lbs. which is 2,576 Ft.-bs. less than the maximum Reel Torque of 4,550 Ft.-Lbs.

Maximum Line Pull = (4,550)/(4.1) = 1440 Lbs.

Maximum Unsupported Cable Length = (1110)/(1.07) = 1037 Ft.

Maximum Power Reel Speed = (1800)/(184.04) = 9.78 RPM
Full Reel Maximum Power Line Speed = (9.78) (3.1416) (98.34)/12 = 251 Ft./Min.
Bare Drum Pitch Diameter = 36 In. + 1.75 In. = 37.75 In.
Bare Reel Maximum Power Line Speed = (9.78)(3.1416)(37.75)/12 = 96 Ft./Min



Confidential Treatment Requested by Transocean Holdings LLC TRN-HCEC-00002077

CONFIDENTIAL TRN-MDL-00043814

## 2.3 PNEUMATIC SYSTEM

The pneumatic system for the Blue Hot Line Hose Reel is illustrated schematically on Patco drawing D41630. The Bill of Material lists the various components used in the system with a reference to the appropriate appendix section for a complete manufacturers description of each component.

The customer must furnish an air supply of 280 Cubic Feet/Min. of free air at 90 PSI to operate at the maximum power condition of 9.78 RPM reel speed, or 340 Cubic Feet/Min of free air at 90 PSI to operate at maximum intermittent speed of 13.04 RPM.

The customer supplied air is *Filtered* (Item 1), *Regulated* (Item 2), and *Lubricated* (Item 3). A *Pressure Gauge* (Item 5) located on the Operators Control Panel monitors the air supply pressure. A pressure Gauge located on the *Air Regulator* (Item 2) monitors the regulated air pressure. The *Main Control Valve* (Item 6) located on the Fenner *Air Motor* (Item 13) operates the *Air Motor* to **"Reel In"** or **"Reel Out"** the cable depending on the operators movement of the *Remote Pilot Control Valve* (Item 7), located on the Operators Control Panel. A spring applied, hydraulic released Brevini *Disc Brake Caliper* (Item 12) automatically releases the disc brake when pilot air is supplied to *Main Control Valve* (Item 6). An *Air/Oil Intensifier* (Item 16), located between the *Quick Release Valve* and the *Disc Brake Caliper*, intensifies the air to hydraulically release the brake. A pneumatic *Quick Release Valve* (Item 14), located at the *Disc Brake Caliper* permits rapid engagement of the disc brake when pilot air to the *Main Control Valve* is shut off by the Operators position of the *Remote Pilot Control Valve*. Exhaust air is silenced thru the *Air Silencers* (Items 9 & 10) located on the Fenner *Air Motor*.

A bulkhead tubing panel is located near the air supply to permit reel operation from a Remote Control Panel if remote operation is required.



fidential Treatment Requested by Transocean Holdings LLC TRN-HCEC-00002078

CONFIDENTIAL TRN-MDL-00043815

## 2.4 SYSTEM CONFIGURATION

The Patco Blue Hot Line Hose Reel is illustrated in drawing D43000.

The reel weldments consist of a 30" diameter heavy wall pipe drum with 96" diameter steel plate flanges spaced 66" apart to store 11,000 feet of 1.75" diameter, 1.07 Lbs./Ft. single line hydraulic hose. A removable type 316 stainless steel stub shaft is flange mounted to one end of the reel, and supported by a heavy duty tapered bearing pillow block. The other end of the reel is supported by heavy duty bearings in the planetary reducer. The reel and hose weight is supported by this combination of bearings. The drive shaft is directly rotated by the 187:1 ratio planetary gear reducer and driven by the radial piston air motor as described in section 2.2, DRIVE SYSTEM.

The spring applied, hydraulic released disc brake caliper is an integral part of the planetary reducer, located between the air motor output shaft and the planetary reducer input drive, provides the necessary braking to stall the pneumatic drive system and support the unsupported length of Hot Line Hose.

The reel, reel shaft and pillow block and reel drive planetary are supported by a structural tubing frame weldment with a (4) four point lift eye arrangement at the upper four corners of the frame.

A removable archimedes type screw level wind is mounted to the front of the reel frame and chain driven from the reel drive shaft. The level wind carriage is self reversing and synchronized with the exit/entry of hose reel flanges with a manual clutch mechanism. Rubber coated rollers on the carriage guide the hose as the carriage traverses.



Confidential Treatment Requested by Transocean Holdings LLC TRN-HCEC-00002079

CONFIDENTIAL TRN-MDL-00043816

## 2.5 SYSTEM SPECIFICATIONS

The specifications of the 11,000 Ft. Blue Hot Line Hose Reel are as follows:

*Overall Dimensions:*

| | | |
|---|---|---|
| Depth | 118 Inches | (9 Ft. 10 In.) |
| Width | 118 Inches | (9 Ft. 10 In.) |
| Height | 110 Inches | (9 Ft. 2 In.) |

*Structural Base Weldment:*

| | | |
|---|---|---|
| Depth | 118 Inches | (9 Ft. 10 In.) |
| Width | 118 Inches | (9 Ft. 10 In.) |

*Drum Weldment:*

| | | |
|---|---|---|
| Flange Diameter | 96 Inch Dia. | (8 Ft. 0 In.) |
| Hub Diameter | 30 Inch Dia. | (3 Ft. 6 In.) |
| Width Between Flanges | 66 Inches | (5 Ft. 6 In.) |

*Drum Bearings:*

5"Dia. Tapered Roller Bearing, Sealed/Lubricated

*Exterior Finish:*

Offshore Splash Zone, (4) coat system

*Drive System:*

Radial Piston Air Motor & Integral Planetary Reducer (184.04:1 Ratio)

*Pneumatic Controls:*

Reel Rotation Speed and Direction via a Local Control Manual Valve, with provisions for operation from a Remote Control Panel

*System Performance:*

| | |
|---|---|
| Maximum Line Pull on 11,000 Ft Layer: | 1110 Lbs. |
| Maximum Line Speed on Bare Drum Layer: | 96 Ft./Min |

*Design Safety Factors:*

1.5 on Line Pull Requirements
2.5 on Structural Design



fidential Treatment Requested by Transocean Holdings LLC TRN-HCEC-00002080

CONFIDENTIAL TRN-MDL-00043817

Confidential Treatment Requested by Transocean Holdings LLC TRN-HCEC-00002081

CONFIDENTIAL TRN-MDL-00043818

# 3.0 SYSTEM OPERATION

## 3.1 START UP

Before starting the Hose Reel for the first time or after performing any maintenance tasks the following should be observed with corrective action taken as necessary:

1. Check the oil level in the *Air Lubricator* and fill with the manufacturers recommended misting type oil with a viscosity of 150-200 SSU at 100 degrees Fahrenheit.
2. Check the *Air Filter* condensate bowl and drain condensate as required.
3. Check the oil level in the *Air Motor Planetary Reducer Case* and fill to the oil level fill plug with the manufacturers recommended gear lubricant, Mobil Oil Mobilgear 630, or equal.
4. Check the oil level in the *Air Motor Case* and fill to the oil level fill plug with the manufacturers recommended crankcase lubricant, Mobil Oil D.T.E. Extra Heavy, or equal.
5. Check the *Regulated Air Pressure* and adjust if necessary. **DO NOT EXCEED 90 PSI** air pressure.

## 3.2 BRAKE OPERATION

The *Disc Brake Caliper* is spring applied and hydraulically released. Spring pressure applies the brake and air over hydraulic pressure releases the brake. In the normal at rest position the brake is normally applied. Whenever pilot air is supplied to the *Air Motor Main Control Valve,* air pressure is applied to the air/oil intensifier and hydraulic fluid moves to the *Disc Brake Caliper*, releasing the brake.

## 3.3 REEL ROTATION

The reel direction of rotation and speed of rotation is controlled by either the local *Pilot Control Valve* located on the reel frame *Control Panel* or a *Pilot Control Valve* from a *Remote Control Panel.* Moving the *Pilot Control Valve* lever away from the reel rotates the reel to **"Reel Hose Out"**. The further the lever is moved, the faster the hose will reel out. Moving the *Pilot Control Valve* lever toward the reel rotates the reel to **"Reel Hose In"**. The further the lever is moved, the faster the hose will reel in.



Confidential Treatment Requested by Transocean Holdings LLC TRN-HCEC-00002082

CONFIDENTIAL TRN-MDL-00043819

Confidential Treatment Requested by Transocean Holdings LLC TRN-HCEC-00002083

CONFIDENTIAL TRN-MDL-00043820

# 4.0 SYSTEM MAINTENANCE

## 4.1 HANDLING TECHNIQUES AND LIMITATIONS

Considering the size and weight of the 11,000 Ft. Hot Line Hose Reel there are suggested methods of handling the reel. The basic envelope size and weights of the Hose Reel assembly is as follows:

*Overall Dimensions:*

| | | |
|---|---|---|
| Depth | 118 Inches | (9 Ft. 10 In.) |
| Width | 118 Inches | (9 Ft. 10 In.) |
| Height | 110 Inches | (9 Ft. 2 In.) |

*Estimated Shipping Weights:*

| | |
|---|---|
| Gross Weight without Hose | 16,500 Lbs. |
| Gross Weight with 11,000 Ft. of Hose | 25,680 Lbs. |
| Gross Weight with 13,750 Ft. of Hose | 27,963 Lbs. |

The Hot Line Hose Reel assembly should be handled from the four (4) *Lifting Eyes* located at each corner of the top frame using a four (4) legged bridle or sling of sufficient capacity to safely support the Gross Weight.

**WARNING & CAUTION**

***RIGGING OF THE CABLE REEL***

***SHOULD ONLY BE UNDERTAKEN***

***BY QUALIFIED PERSONNEL WITH***

***CERTIFIED EQUIPMENT***



fidential Treatment Requested by Transocean Holdings LLC TRN-HCEC-00002084

CONFIDENTIAL TRN-MDL-00043821

## 4.2 OPERATING MAINTENANCE

To ensure continued satisfactory performance of the Patco 11,000 Ft Hot Line Hose Reel the following *Maintenance Tasks* should be performed by the operating personnel:

| *TIME INTERVAL* | *TASK* |
|---|---|
| *Daily* | 1. Check air supply, operating tubing lines. and hoses for air leaks and tighten fittings or replace hoses and tubing as necessary.<br>2. Check air filter and replace *Filter Element* as necessary. (See Appendix 7 for details)<br>3.Check oil level in *Air Lubricator* and fill as necessary with the manufacturers recommended misting type oil lubricant. (See Appendix 9 for details) |
| *Monthly* | 1. Check gear oil fluid level in the *Air Motor Planetary Gear Reducer Case* and fill as necessary with the manufacturers recommended gear lubricant. (See Appendix 3 for details)<br>2. Check gear oil fluid level in the *Air Motor Case* and fill as necessary with the manufacturers recommended gear lubricant. (See Appendix 4 for details)<br>3. Check the *Roller Chain* for lubrication and lubricate with a suitable roller chain lubricant as necessary. (See Appendix 13 for details)<br>4. Check the *Level Wind Lead Screw* for lubrication and lubricate with a suitable grease as necessary.<br>5. Lubricate the main shaft *Pillow Blocks* with the manufacturers recommended grease lubricant as necessary. (See Appendix 2 for details) |



Confidential Treatment Requested by Transocean Holdings LLC TRN-HCEC-00002085

CONFIDENTIAL TRN-MDL-00043822

| | |
|---|---|
| | 6. Lubricate the *Level Wind Flange Bearings* with the manufacturers recommended grease lubricant as necessary. (See Appendix 17 for details) |
| *Yearly* | Replace the fluids in the following components with the manufacturers recommended lubricant:<br>1. *Air Motor Planetary Gear Reducer*<br>2. *Air Motor Case* |
| *As Required* | Remove rust and paint and resurface in accordance with the *Paint Specifications* presented in the Section 4.4 *System Coating Specifications.* |

*NOTE: Depending on the duty cycle of the Hot Line Hose Reel, the Maintenance tasks time intervals may be reduced or increased. See appropriate Appendix for manufacturers recommendations.*



fidential Treatment Requested by Transocean Holdings LLC TRN-HCEC-00002086

CONFIDENTIAL TRN-MDL-00043823

## 4.3 RECOMMENDED SPARE PARTS

The final decision on the level of spares to be maintained for the Hot Line Hose Reel is left up to the operator. Patco has compiled a *Recommended Spare Parts* list based on operating experience with similar systems.

The following conditions were taken into consideration to establish the recommended list:

1. The system will be *"At-Sea"*, therefore replacement components and spare parts are not readily available.
2. Components requiring a high level of expertise will only be spared at the component level.

Three levels of *Spare Parts* are itemized.

| | |
|---|---|
| *Level I* | Consumables |
| *Level II* | Repair Parts and/or Kits |
| *Level III* | Replacement Components |

| | |
|---|---|
| Table 4.3-1 | A Detailed List of Level I Spares |
| Table 4.3-2 | A Detailed List of Level II Spares |
| Table 4.3-3 | A Detailed List of Level III Spares |

The Recommended Spares List presented in the tables is considered to be maximum coverage. A minimum level of spares coverage could be as follows:

| | |
|---|---|
| *Level I* | All Listed Items |
| *Level II* | None |
| *Level III* | None |

The final decision is left up to the operator.



Confidential Treatment Requested by Transocean Holdings LLC TRN-HCEC-00002087

CONFIDENTIAL TRN-MDL-00043824

TABLE 4.3-1

LEVEL I SPARES --- ***CONSUMABLES***

| COMPONENT | ITEM | SPECIFICATIONS | QTY. | APPENDIX |
|---|---|---|---|---|
| Pillow Block | Grease | No. 2 consistency Lithium-Base | ADN | 2 |
| Air Motor | Crankcase Oil | Mobil Oil D.T.E. Extra Heavy | ADN | 4 |
| Air Motor Planetary Reducer | Gearcase Oil | Mobil Oil Mobilgear 630 | ADN | 3 |
| Air Filter | Element | #5311-03 (50 micron) | 6/reel | 7 |
| Roller Chain | Oil | Chain Oil | ADN | 13 |
| Flange Bearing | Grease | No. 2 consistency Lithium-Base | ADN | 17 |

ADN = *As Deemed Necessary* Quantity will depend on the *Re-Supply* cycle time



fidential Treatment Requested by Transocean Holdings LLC TRN-HCEC-00002088

CONFIDENTIAL TRN-MDL-00043825

TABLE 4.3-2

LEVEL I SPARES --- ***REPLACEMENT PARTS and/or KITS***

| COMPONENT | ITEM | SPECIFICATIONS | QTY. | APPENDIX |
|---|---|---|---|---|
| Air Filter | Seal Kit | #5578-05 | 1/reel | 7 |
| | Sight Glass | #2273-15 | 1/reel | 7 |
| Air Regulator | Repair Kit | #5578-02 (relieving) | 1/reel | 8 |
| Air Lubricator | Repair Kit | #5771-02 | 1/reel | 9 |
| | Sight Glass | #2273-15 | 1/reel | 9 |
| Relay Valve | Repair Kit | #P57431 | 1/reel | 10 |
| Quick Release Valve | Repair Kit | #P60213-2 | 1/reel | 16 |
| Pilot Valve | Repair Kit | #P57136 | 1/reel | 11 |



Confidential Treatment Requested by Transocean Holdings LLC TRN-HCEC-00002089

CONFIDENTIAL TRN-MDL-00043826

TABLE 4.3-3

LEVEL III SPARES --- ***REPLACEMENT COMPONENTS***

| COMPONENT | SPECIFICATIONS | QTY. | APPENDIX |
|---|---|---|---|
| Hydraulic Swivel | D41813 | 1 | 1 |
| Pillow Block | 023039, 5" Shaft | 2 | 2 |
| Air Motor & Reducer | R33XXXR1 | 1 | 4A |
| Air Silencer | 0383010 1" MNPT | 1 | 6A |
| Air Silencer | 0383012 1-1/4" MNPT | 1 | 6B |
| Air Filter | F17-800-A3DA | 1 | 7 |
| Air Regulator | R17-800-RGLA | 1 | 8 |
| Air Lubricator | L17-800-MPDA | 1 | 9 |
| Relay Valve | 8-S-P55163 | 1 | 10 |
| Air Pilot Valve | HD-2-FX P50970-0003 | 1 | 11 |
| Roller Chain | ANSI 40 | 10 Ft. | 13 |
| Shuttle Valve | SV-3 | 1 | 14 |
| Pressure Gauge | 40.510-300-FF | 1 | 15 |
| Quick Release Valve | P52935-0002 | 1 | 16 |
| Flange Bearing | 124125 1-1/2" Shaft | 2 | 17 |
| Hose Assembly | FC-350-16-30" O.A.L. C/W 411-16B Fittings each end | 1 | 18 |



fidential Treatment Requested by Transocean Holdings LLC TRN-HCEC-00002090

CONFIDENTIAL TRN-MDL-00043827

TABLE 4.3-3

LEVEL III SPARES --- ***REPLACEMENT COMPONENTS***

| COMPONENT | SPECIFICATIONS | QTY. | APPENDIX |
|---|---|---|---|
| Air/Oil Intensifier | BD42, 2 ½" bore, 1" ram, 4" stroke | 1 | 19 |
| Air Breather | ASP-3 | 1 | 20 |



Confidential Treatment Requested by Transocean Holdings LLC TRN-HCEC-00002091

CONFIDENTIAL TRN-MDL-00043828

## 4.4 SYSTEM COATING SPECIFICATIONS

The external protective coating for the Patco Blue Hot Line Hose Reel was applied in accordance with Cameron Controls *"Standard Coatings for Offshore Equipment" A-018011-33, Splash Zone Service, Cameron Blue (RAL 5015).*

These specifications should be followed as closely as possible for any touch-up or repainting of the system.



ifidential Treatment Requested by Transocean Holdings LLC TRN-HCEC-00002092

CONFIDENTIAL TRN-MDL-00043829

APPROVED BY DATE

2/11/98

**EXTERNAL PROTECTIVE COATINGS-CAMERON CONTROLS**
**STANDARD COATINGS FOR OFFSHORE EQUIPMENT**
**(REFERENCE: A-002500-01)**

## 1.0 SCOPE

This specification lists the specific requirements for external protective coatings for offshore equipment manufactured by Cameron. A-002500-01 forms an integral part of this document.

## 2.0 EQUIPMENT SERVICE/TOP COAT COLORS

Topcoat colors shall be as specified below. Intermediate coats may be any available color, however, alternating coats must be colored differently to facilitate visual inspection of coverage.

| Dash # | Rev | Service | Color |
|---|---|---|---|
| -01 | A1 | Platform | White |
| -02 | A1 | Platform | Red (RAL #3011) |
| -03 | A1 | Platform | Cameron Blue (RAL #5015) |
| -04 | A1 | Platform | Cameron Yellow (RAL #1021) |
| -21 | A1 | Immersion | White |
| -22 | A1 | Immersion | Cameron Red (RAL #3011) |
| -23 | A1 | Immersion | Cameron Blue (RAL #5015) |
| -24 | A1 | Immersion | Cameron Yellow (RAL #1021) |
| -31 | A1 | Splash Zone | White |
| -32 | A1 | Splash Zone | Cameron Red (RAL #3011) |
| -33 | A1 | Splash Zone | Cameron Blue (RAL #5015) |
| -34 | A1 | Splash Zone | Cameron Yellow (RAL #1021) |

## 3.0 SURFACE PREPARATION

### 3.1 Surface Cleanliness

| Service | Method |
|---|---|
| Platform | Near White Metal Blast Cleaning in accordance with SSPC-SP 10. |
| Immersion | White Metal Blast Cleaning in accordance with SSPC-SP 5. |
| Splash Zone | White Metal Blast Cleaning in accordance with SSPC-SP 5. |

### 3.2 Anchor Pattern

Blasting shall develop an anchor pattern of 1-3 mils.

## 4.0 COATING SYSTEMS

### 4.1 Platform Service

| Carboline | Dry Film Thickness |
|---|---|
| a. 1 Coat Carbozinc 11(in organic zinc) | 2-3 mils (50-75 microns) |
| b. 2 Coats Carboline 890 HB (epoxy polyamide) | 4-7 mils (100-175 microns)per coat |
| c. 1 Coat Carboline 134 (polyurethane) | 2- 3 mils (50-75 microns) |
| Total for System | 12-20 mils (305-508 microns) |


document contains confidential and trade secret information which is the sole property of CAMERON, a division of COOPER CAMERON CORPORATION. Receipt or possession does not any right to loan, sell or otherwise disclose said information. Reproduction or use of said information for any purpose other than that for which it is intended may not be made without permission from CAMERON. This document is to be returned to CAMERON upon request and in all events upon completion of the use for which it is intended.





Confidential Treatment Requested by Transocean Holdings LLC TRN-HCEC-00002093

CONFIDENTIAL TRN-MDL-00043830

| Sherwin-Williams | Dry Film Thickness |
|---|---|
| a. 1 coat ZincClad™ XI (in organic zinc) | 2-3 mils (50-75 microns) |
| b. 1 coat DuraPox 447™ HB Epoxy (epoxy polyamide) | 4-6 mils (100-150 microns) |
| c. 1 coat Enviro-Guard™ High Build Urethane | 3-5 mils (75-125 microns) |
| Total for System | 9-14 mils (225-350 microns) |

| Ameron | Dry Film Thickness |
|---|---|
| a. 1 Coat Dimetcote 9 (in organic zinc) | 2-3 mils (50-75 microns) |
| b. 2 Coats Amercoat 385 (epoxy) | 4-7 mils (100-175 microns)per coat |
| c. 1 Coat Amercoat 450HS (polyurethane) | 2- 3 mils (50-75 microns) |
| Total for System | 12-20 mils (305-508 microns) |

4.2 Immersion Service

| Carboline | Dry Film Thickness |
|---|---|
| 3 Coats Carboline 890 HB (Epoxy Polyamide) | 4-7 mils (100-175 microns) per coat |
| Total for System | 12-21 mils (300-525 microns) |

| Sherwin-Williams | Dry Film Thickness |
|---|---|
| 3 coats DuraPox 447™ HB Epoxy (epoxy polyamide) | 4-6 mils (100-150 microns) |
| Total for System | 12-18 mils (300-450 microns) |

| Ameron | Dry Film Thickness |
|---|---|
| 3 Coats Amercoat 385 (epoxy) | 4-7 mils (100-175 microns) per coat |
| Total for System | 12-21 mils (300-525 microns) |

4.3 Splash Zone Service

| Carboline | Dry Film Thickness |
|---|---|
| a. 1 Coat Carbozinc 11(inorganic zinc) | 2-3 mils (50-75 microns) |
| b. 2 Coats Carboline 890 HB (epoxy polyamide) | 4-7 mils (100-175 microns)per coat |
| c. 1 Coat Carboline 134 (polyurethane) | 2- 3 mils (50-75 microns) |
| Total for System | 12-20 mils (305-508 microns) |

| Sherwin-Williams | Dry Film Thickness |
|---|---|
| a. 1 coat ZincClad™ X1 (inorganic zinc) | 2-3 mils (50-75 microns) |
| b. 1 coat DuraPox 447™ HB Epoxy (epoxy polyamide) | 4-6 mils (100-150 microns) |
| c. 1 coat Enviro-Guard™ High Build Urethane | 3-5 mils (75-125 microns) |
| Total for System | 9-14 mils (225-350 microns) |

| Ameron | Dry Film Thickness |
|---|---|
| a. 1 Coat Dimetcote 9 (in organic zinc) | 2-3 mils (50-75 microns) |
| b. 2 Coats Amercoat 385 (epoxy) | 4-7 mils (100-175 microns)per coat |
| c. 1 Coat Amercoat 450HS (polyurethane) | 2- 3 mils (50-75 microns) |
| Total for System | 12-20 mils (305-508 microns) |

5.0 COATING MANUFACTURERS

For information on the availability of coating products, contact:

Document contains confidential and trade secret information which is the sole property of CAMERON, a division of COOPER CAMERON CORPORATION. Receipt or possession does not convey any right to learn, sell or otherwise disclose said information. Reproduction or use of said information for any purpose other than that for which it is intended may not be made without written permission from CAMERON. This document is to be returned to CAMERON upon request and in all events upon completion of the use for which it is intended.



Confidential Treatment Requested by Transocean Holdings LLC TRN-HCEC-00002094

CONFIDENTIAL TRN-MDL-00043831

CARBOLINE COMPANY
Corporate Office:
350 Hanley Industrial Court
St. Louis, Missouri 63144
(314) 644-1000

SHERWIN-WILLIAMS COMPANY
The Sherwin Williams Company
6450 Long Point
Houston, Texas 77055
(713) 686-9961

AMERON
Protective Coatings Group
Gulf Region
5900 Clinton Drive
Houston, TX 77020
(713) 672-8140

## APPENDIX I – REPAIR OF COATINGS

### 1.0 SCOPE

Parts with damaged coatings may undergo a localized repair provided:

A. No single damaged area exceeds one square foot in area, AND
B. The cumulative total of all damaged areas does not exceed 10% of the surface area of the part.

If the coating damage exceeds the above criteria, localized repair is not permitted. The part shall be completely blast cleaned and recoated per this specification.

### 2.0 PROCEDURE FOR COATINGS WITHOUT AN INORGANIC ZINC PRIMER

2.1 Remove grease, oil, dirt, etc., from the damaged area using a clean rag with an appropriate solvent.

2.2 Spot blast or sandpaper damaged area down to bare metal.

2.3 Lightly sandpaper to feather the edge of the remaining good coating adjacent to the repair.

2.4 Recoat per the original requirements of this specification.

### 3.0 PROCEDURE FOR COATINGS WITH AN INORGANIC ZINC PRIMER

3.1 Remove grease, oil, dirt, etc., from the damaged area using a clean rag with appropriate solvent.

3.2 If the damage is essentially limited to the top coats and the inorganic zinc primer shows no loss of adhesion, then sandpaper or lightly blast off the damaged top coats leaving the remaining zinc primer intact. Insure that there are no loose particles of primer left on the surface.
If the inorganic zinc primer in the damaged area shows lack of adhesion, sandpaper or spot blast to bare metal.

Note: Mechanical damage extending through the zinc primer to bare metal is acceptable provided the remaining zinc primer does not show lack of adhesion.

3.3 Lightly sandpaper to feather the edge of the remaining good coating adjacent to the repair.

3.4 Recoat per the original requirements of this specification omitting the inorganic zinc primer. *Do not use the inorganic zinc primer when making a repair.*

document contains confidential and trade secret information which is the sole property of CAMERON, a division of COOPER CAMERON CORPORATION. Receipt or possession does not ey any right to loan, sell or otherwise disclose said information. Reproduction or use of said information for any purpose other than that for which it is intended may not be made without ritten permission from CAMERON. This document is to be returned to CAMERON upon request and in all events upon completion of the use for which it is intended.



Confidential Treatment Requested by Transocean Holdings LLC TRN-HCEC-00002095

CONFIDENTIAL TRN-MDL-00043832

## 4.5 SHIPPING RECOMMENDATIONS

The Basic envelope dimensions and weights of the Patco 11,000 ft. Blue Hot Line Hose Reel are as follows:

*Overall Dimensions:*

| | | |
|---|---|---|
| Depth | 118 Inches | (9 Ft. 10 In.) |
| Width | 118 Inches | (9 Ft. 10 In.) |
| Height | 110 Inches | (9 Ft. 2 In.) |

*Estimated Shipping Weights:*

| | |
|---|---|
| Gross Weight without Cable | 16,500 Lbs. |
| Gross Weight with 11,000 Ft. of Cable | 25,680 Lbs. |
| Gross Weight with 13,750 Ft. of Cable | 27,963 Lbs. |

Whenever the Hot Line Hose Reel is being transported the following procedures should be followed:

1). Investigate the bearing load area relative to the shipping mode.

2). Handle the Reel in accordance with the suggested techniques presented in Section 4.1 *"Handling Techniques and Limitations"*.

3). Properly secure the Reel to the transport surface.

4). Engage the manual pin brake to secure the reel to the frame.

5). Confirm that the spring applied, pneumatically released disc brake caliper has engaged the brake disc.

**WARNING & CAUTION**

***RIGGING OF THE CABLE REEL***

***SHOULD ONLY BE UNDERTAKEN***

***BY QUALIFIED PERSONNEL WITH***

***CERTIFIED EQUIPMENT***



Confidential Treatment Requested by Transocean Holdings LLC TRN-HCEC-00002096

CONFIDENTIAL TRN-MDL-00043833

## 4.6 RECORD KEEPING

- Patco recommends that an *"Operations Log"* and a *"Maintenance Log"* be maintained for the Patco Blue Hot Line Hose Reel. A copy of the suggested log format is presented on the following pages.

  Completed logs will present historical data on the operations of the system. The information supplied in the logs will assist the end user to monitor system performance and operation.



Confidential Treatment Requested by Transocean Holdings LLC TRN-HCEC-00002097

CONFIDENTIAL TRN-MDL-00043834

CAMERON

MAINTENANCE LOG

R & B FALCON
RBS – 8D
HOTLINE HOSE REEL, BLUE
S/N 1168-13525-99-12
CAMERON P/N 2020988-02

| DATE | EXERCISE | MAINTENANCE TASKS ACCOMPLISHED & REMARKS AND SIGNATURE OF OPERATOR PERFORMING EXERCISE |
|---|---|---|
| | | |
| | | |
| | | |
| | | |
| | | |
| | | |
| | | |
| | | |
| | | |
| | | |
| | | |
| | | |
| | | |
| | | |
| | | |
| | | |
| | | |
| | | |
| | | |
| | | |
| | | |
| | | |
| | | |

Confidential Treatment Requested by Transocean Holdings LLC TRN-HCEC-00002098

CONFIDENTIAL TRN-MDL-00043835

CAMERON

OPERATIONS LOG

R & B FALCON
RBS - 8D
HOTLINE HOSE REEL, BLUE
CAMERON P/N 2020988-02
S/N 1168-13525-99-12

| EVENT NO. | EXERCISE AND DATE(S) | OPERATING TIME | | | | REMARKS AND SIGNATURE OF OPERATOR DOCUMENTING THIS EVENT |
|---|---|---|---|---|---|---|
| | | ON TIME | OFF TIME | ELAPSE TIME | TOTAL HOURS | |
| | | | | | | |
| | | | | | | |
| | | | | | | |
| | | | | | | |
| | | | | | | |
| | | | | | | |
| | | | | | | |
| | | | | | | |
| | | | | | | |
| | | | | | | |
| | | | | | | |
| | | | | | | |
| | | | | | | |
| | | | | | | |
| | | | | | | |
| | | | | | | |

Confidential Treatment Requested by Transocean Holdings LLC
TRN-HCEC-00002099
CONFIDENTIAL
TRN-MDL-00043836

fidential Treatment Requested by Transocean Holdings LLC



CONFIDENTIAL

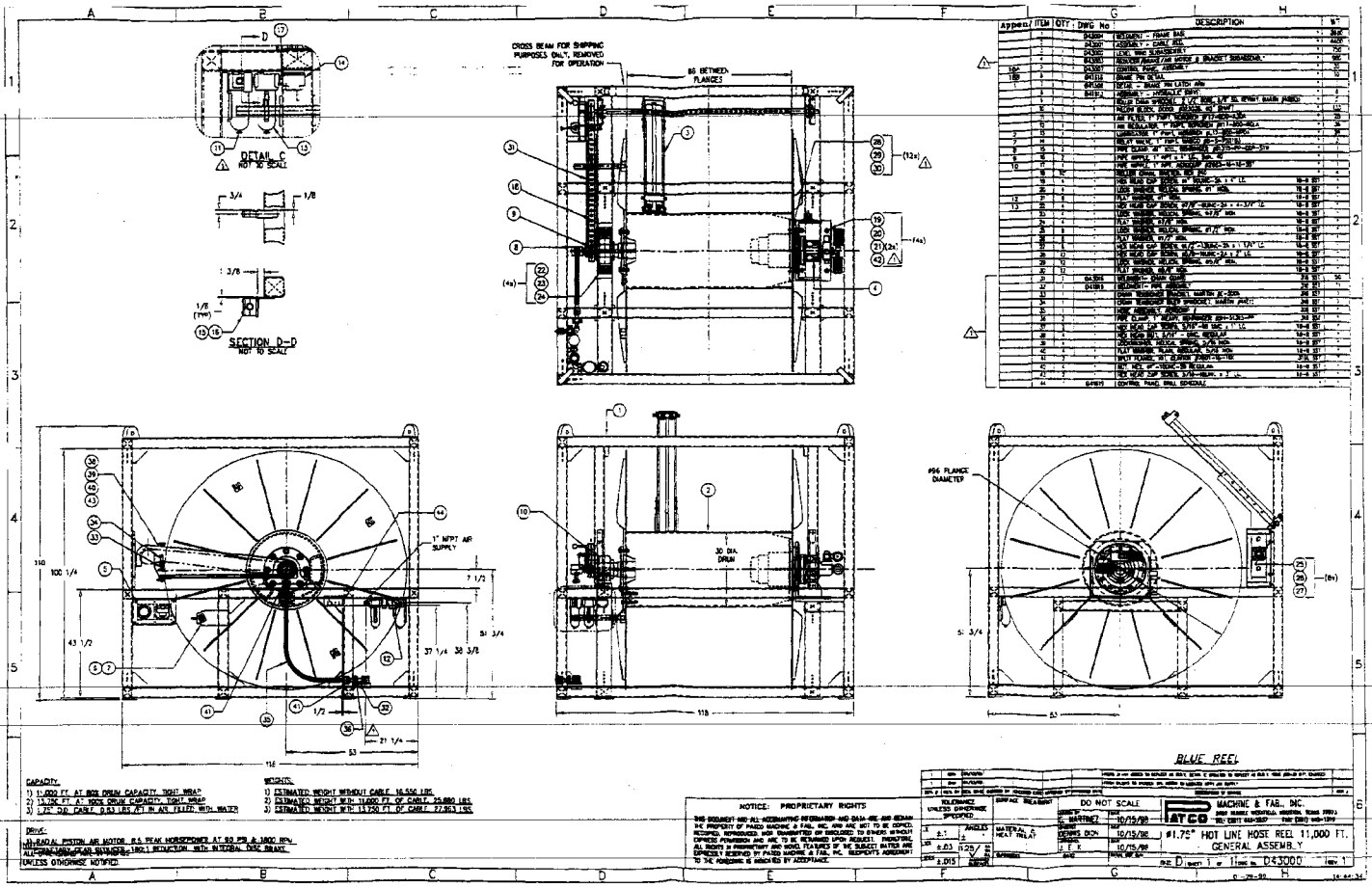
DETAIL C
NOT TO SCALE
SECTION D-D
NOT TO SCALE
CROSS BEAM FOR SHIPPING PURPOSES ONLY, REMOVED FOR OPERATION
86 BETWEEN FLANGES
1" NPT AIR SUPPLY
30 DIA. DRUM
PS6 FLANGE DIAMETER
BLUE REEL
CAPACITY:
1) 11,000 FT. AT 80% DRUM CAPACITY, TIGHT WRAP
2) 13,70 FT. AT 100% DRUM CAPACITY, TIGHT WRAP
3) 1.75" O.D. CABLE 0.83 LBS/FT IN AIR FILLED WITH WATER
WEIGHTS:
1) ESTIMATED WEIGHT WITHOUT CABLE 16,550 LBS.
2) ESTIMATED WEIGHT WITH 11,000 FT OF CABLE 25,880 LBS.
3) ESTIMATED WEIGHT WITH 13,730 FT OF CABLE 27,863 LBS.
DRIVE:
1) RADIAL PISTON AIR MOTOR 8.5 PEAK HORSEPOWER AT 80 PSI & 1800 RPM
2) ALL-GEAR ASSY, GEAR RATIO 18:1 REDUCTION WITH INTERNAL DISC BRAKE
UNLESS OTHERWISE NOTIFIED
NOTICE: PROPRIETARY RIGHTS
DO NOT SCALE
MACHINE & FAB. INC.
#1.75" HOT LINE HOSE REEL 11,000 FT.
GENERAL ASSEMBLY
D43000

| ITEM | QTY | DWG. No | DESCRIPTION | WT |
|---|---|---|---|---|
| 1 | 1 | D-43002 | ASSEMBLY - LEVEL WIND LEAD SCREW FRAME | 443 |
| 2 | 1 | D-43004 | ASSEMBLY - ROLLER GUIDE SUPPORT | 132 |
| 3 | 1 | D-43013 | ASSEMBLY - V-HS WIND ROLLER BOX | 100 |
| 4 | 1 | D-43012 | ASSEMBLY - LEVEL WIND PAN | 42 |
| 5 | 13 | - | HEAVY WASHER 5/8" ID | 1 |
| 6 | 12 | - | HEX HEAD NUT, 3/8-16UNC | - |
| 7 | 12 | - | HEX HEAD CAP SCREW, 3/8-16UNC x 1/2" LG | - |

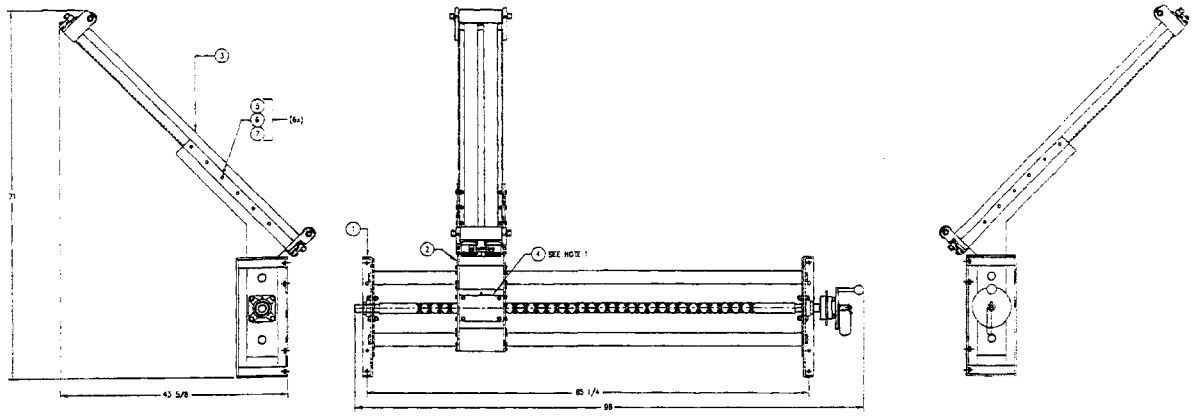


BLUE REEL

NOTES:

1. 4) INTERNAL SPACE AS REQUIRED TO MAINTAIN PAN. CONTACT TO LEAD SCREW.
2. ALL DIMENSIONS ARE IN INCHES UNLESS OTHERWISE SPECIFIED.
3. ESTIMATED WEIGHT = 750 LBS.


NOTICE: PROPRIETARY RIGHTS

THIS DOCUMENT AND ALL ACCOMPANYING INFORMATION AND DATA ARE AND REMAIN THE PROPERTY OF PATECO MACHINE & FAB., INC. AND ARE NOT TO BE COPIED, TRANSFERRED, REPRODUCED, NOR TRANSMITTED OR DISCLOSED TO THIRD PARTIES WITHOUT EXPRESS PERMISSION, AND ARE TO BE RETURNED UPON REQUEST. THEREFORE, ALL RIGHTS IN PROPRIETARY AND MODEL FEATURES OF THE SUBJECT MATTER ARE EXPRESSLY RESERVED BY PATECO MACHINE & FAB., INC. RESPONDENT'S AGREEMENT TO THE FOREGOING IS INDICATED BY ACCEPTANCE.


TOLERANCE UNLESS OTHERWISE SPECIFIED: X ±.1; XX ±.03; XXX ±.015; ANGLES ±°; MATERIAL & HEAT TREAT: 125/ ; FINISH:

SURFACE TREATMENT:

DO NOT SCALE

DRAWN BY: G. NARBREC 10/16/98

DESIGNED BY: DENNIS DRDA 10/16/98

APPROVED BY: 10/16/98

PATECO MACHINE & FAB., INC.

#1.75" HOT LINE HOSE REEL 11,000 FT.

LEVEL WIND SUBASSEMBLY

SIZE D SHEET 1 OF 1 DWG. No. D43002 REV. C

10-27-98

| Appen. | ITEM | QTY | DWG No | DESCRIPTION | | | WT |
|---|---|---|---|---|---|---|---|
| | 1 | 1 | 841613 | BRACKET DETAIL | | * | 235 |
| 3 | 2 | 1 | * | BREVINI, MODEL #RAF50/3/180/FL250 | | * | 516 |
| 4A | 3 | 1 | * | RADIAL PISTON AIR MOTOR, FENNER #33856R1 | | * | 187 |
| 6A | 4 | 1 | * | AIR SILENCER, 1" MNPT, ALLIED WITAN #0383010 | | * | * |
| 6B | 5 | 1 | * | AIR SILENCER, 1-1/4" MNPT, ALLIED WITAN #0383012 | | * | * |
| | 6 | 15 | * | HEX HEAD CAP SCREW, #5/8-11UNC-2B x 1-3/4" LG | 18-8-SST | * | * |
| | 7 | 15 | * | LOCK WASHER, HELICAL SPRING, #5/8" NOM. | 18-8-SST | * | * |
| | 8 | 15 | * | FLAT WASHER, #5/8" NOM. N-SERIES | 18-8-SST | * | * |
| | 9 | 1 | * | 1" NPT, 150# STREET ELBOW | TYPE 316 SST | * | * |
| | 10 | 1 | * | 1-1/4" NPT, 150# STREET ELBOW | TYPE 316 SST | * | * |
| | 11 | 4 | * | HEX HEAD CAP SCREW, #1/2-13UNC-2B x 1-3/4" LG | 18-8-SST | * | * |
| | 12 | 4 | * | LOCK WASHER, HELICAL SPRING, #1/2" NOM. | 18-8-SST | * | * |
| | 13 | 4 | * | FLAT WASHER, #1/2" NOM. N-SERIES | 18-8-SST | * | * |
| 19 | 14 | 1 | * | 2-1/2" BORE, 1" RAM, 4" STROKE, MILWAUKEE #BD42 | | * | * |
| 20 | 15 | 1 | * | #EXHAUST MUFFLER, ARROW PNEUMATICS #ASP-3, 3/8" NPT | | * | * |
| | 16 | 4 | * | HEX HEAD CAP SCREW, #1/4-20UNC-2B x 1" LG | 18-8-SST | * | * |
| | 17 | 4 | * | LOCK WASHER, HELICAL SPRING, #1/4" NOM. | 18-8-SST | * | * |
| | 18 | 4 | * | FLAT WASHER, #1/4" NOM. N-SERIES | 18-8-SST | * | * |

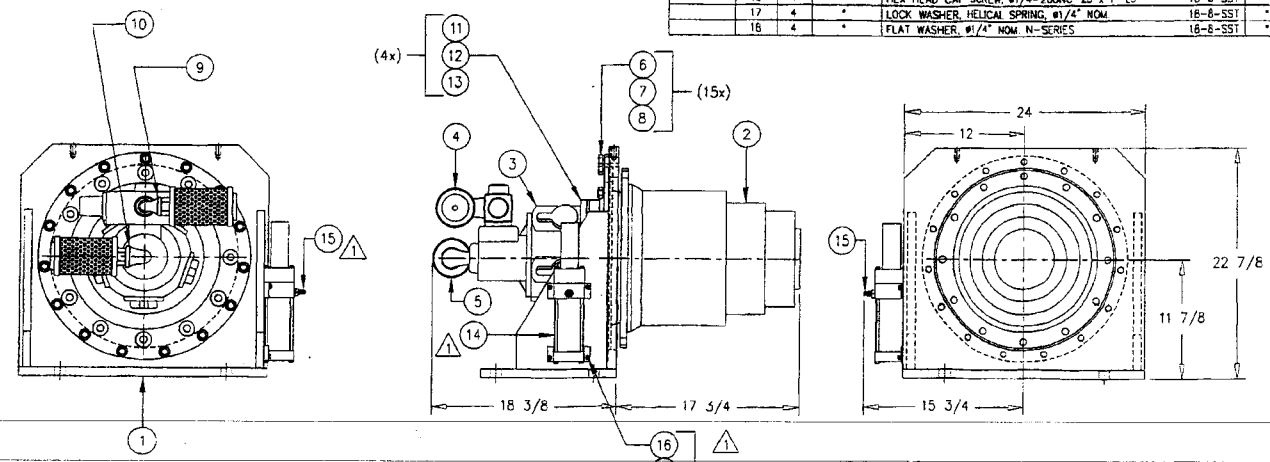


NOTE:
1. ALL DIMENSIONS ARE IN INCHES UNLESS OTHERWISE NOTIFIED.
2. ESTIMATED WEIGHT 980 Lbs.

BLUE REEL

NOTICE: PROPRIETARY RIGHTS

DO NOT SCALE

MACHINE & FAB., INC.

MUX/HOT LINE REELS
REDUCER/BRAKE/AIR MOTOR & BRACKET SUBASSY

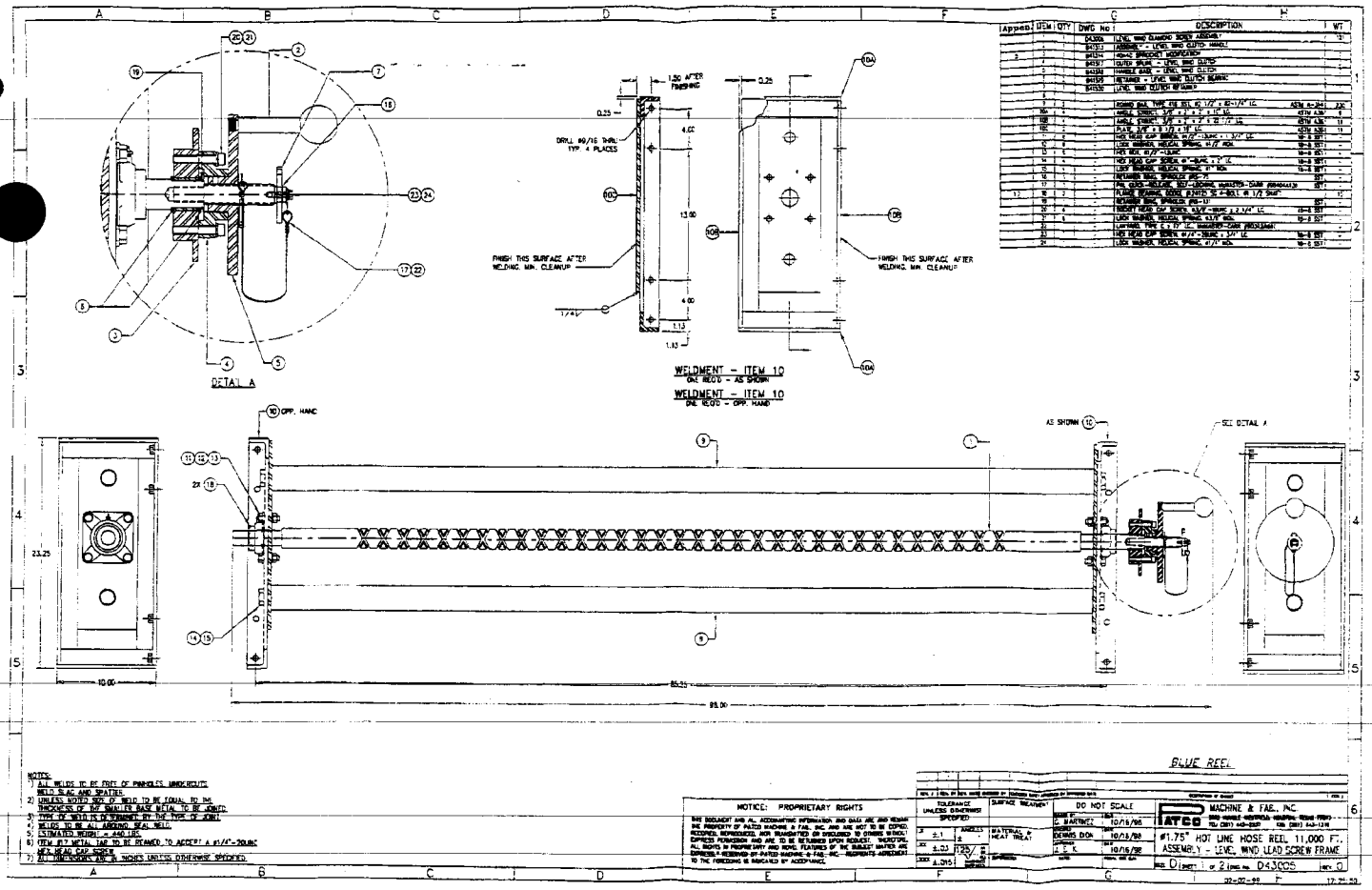


| Approved | UOM | QTY | DWG No | DESCRIPTION | | WT |
|---|---|---|---|---|---|---|
| | | | D43004 | LEVEL WIND DIAMOND BODY ASSEMBLY | | 31 |
| | | | B41513 | ASSEMBLY - LEVEL WIND CLUTCH HANDLE | | |
| 3 | | | B41514 | HUB SPROCKET MODIFICATION | | |
| | | | B41517 | OUTER SPLINE - LEVEL WIND CLUTCH | | |
| | | | B41518 | HANDLE BASE - LEVEL WIND CLUTCH | | 1 |
| | | | B41519 | RETAINER - LEVEL WIND CLUTCH BEARING | | |
| | | | B41520 | LEVEL WIND CLUTCH BEARING | | |
| | | | | | | |
| | | | | ROUND BAR, TYPE 316 SST, 6 1/2" x 25-1/2" LG. | ASTM A-240 | 330 |
| | W | 1 | | ANGLE, STRUCT. 3/8" x 3" x 3" x 10" LG. | ASTM A36 | 8 |
| | HR | 1 | | ANGLE, STRUCT. 3/8" x 3" x 3" x 21-1/2" LG. | ASTM A36 | 11 |
| | HR | 1 | | PLATE 3/8" x 8 1/2" x 14" LG. | ASTM A36 | 11 |
| | | 1 | | HEX HEAD CAP SCREW, 5/8"-11UNC x 3 1/2" LG. | 18-8 SST | |
| | C | 1 | | LOCK WASHER, HELICAL SPRING, 5/8" NOM. | 18-8 SST | |
| | D | 1 | | HEX NUT, 5/8"-11UNC | 18-8 SST | |
| | H | 1 | | HEX HEAD CAP SCREW, 0"-16UNC x 2" LG. | 18-8 SST | |
| | G | 1 | | LOCK WASHER, HELICAL SPRING, 3" NOM. | 18-8 SST | |
| | G | 1 | | RETAINER RING, SPIROLOX (RS-7) | SST | |
| | 17 | 1 | | PIN, QUICK-RELEASE, SELF-LOCKING, MASTER-CLAMP (R0004438) | SST | |
| 17 | 18 | 1 | | FLANGE BEARING, BORG 2X2FB, 2" x 2" BELL W 1/2" SHAFT | | 12 |
| | 19 | 1 | | RETAINER RING, SPIROLOX (RS-1) | SST | |
| | 20 | 4 | | FLAT HEAD CAP SCREW, 5/8"-11UNC x 2 1/4" LG. | 18-8 SST | |
| | 21 | 4 | | LOCK WASHER, HELICAL SPRING, 5/8" NOM. | 18-8 SST | |
| | 22 | | | LIGHTNING, TYPE C-3 17" LG. WASHER-CLAMP (R0003438) | | 2 |
| | 23 | 4 | | HEX HEAD CAP SCREW, 0"-16UNC x 1" LG. | 18-8 SST | |
| | 24 | 4 | | LOCK WASHER, HELICAL SPRING, 0" NOM. | 18-8 SST | |

NOTES:
1) ALL WELDS TO BE FREE OF PINHOLES, UNDERCUTS, WELD SLAG AND SPATTER.
2) UNLESS NOTED SIZE OF WELD TO BE EQUAL TO THE THICKNESS OF THE SMALLER BASE METAL TO BE JOINED.
3) TYPE OF WELD IS DETERMINED BY THE TYPE OF JOINT.
4) WELDS TO BE ALL AROUND SEAL WELD.
5) ESTIMATED WEIGHT = 440 LBS.
6) VIEW #17 METAL TAB TO BE REAMED TO ACCEPT A #1/4"-20UNC HEX HEAD CAP SCREW.
7) ALL DIMENSIONS ARE IN INCHES UNLESS OTHERWISE SPECIFIED.

NOTICE: PROPRIETARY RIGHTS
THIS DOCUMENT AND ALL ACCOMPANYING INFORMATION AND DATA ARE AND REMAIN THE PROPERTY OF PATCO MACHINE & FAB, INC. AND ARE NOT TO BE COPIED, RECORDED, REPRODUCED, NOR TRANSMITTED OR DISCLOSED TO OTHERS WITHOUT EXPRESS PERMISSION AND ARE TO BE RETURNED UPON REQUEST. "PATENTS", ALL RIGHTS IN PROPRIETARY AND NOVEL FEATURES OF THE SUBJECT MATTER ARE EXPRESSLY RESERVED BY PATCO MACHINE & FAB., INC. RECIPIENTS AGREEMENT TO THE FOREGOING IS INDICATED BY ACCEPTANCE.

TOLERANCE UNLESS OTHERWISE SPECIFIED: .X ±.1 ANGLES ±1 / .XX ±.03 / .XXX ±.015
SURFACE TREATMENT: MATERIAL & HEAT TREAT
DO NOT SCALE
DRAWN BY: C. BARTNICZ 10/15/98
CHECKED: DRAWING DON 10/15/98
APPROVED: 10/15/98
PATCO MACHINE & FAB., INC.
#1.75" HOT LINE HOSE REEL, 11,000 FT.
ASSEMBLY - LEVEL WIND LEAD SCREW FRAME
SIZE D SHEET 1 OF 2 DWG NO. D43005 REV. 0
32-02-98 F 17.25.50

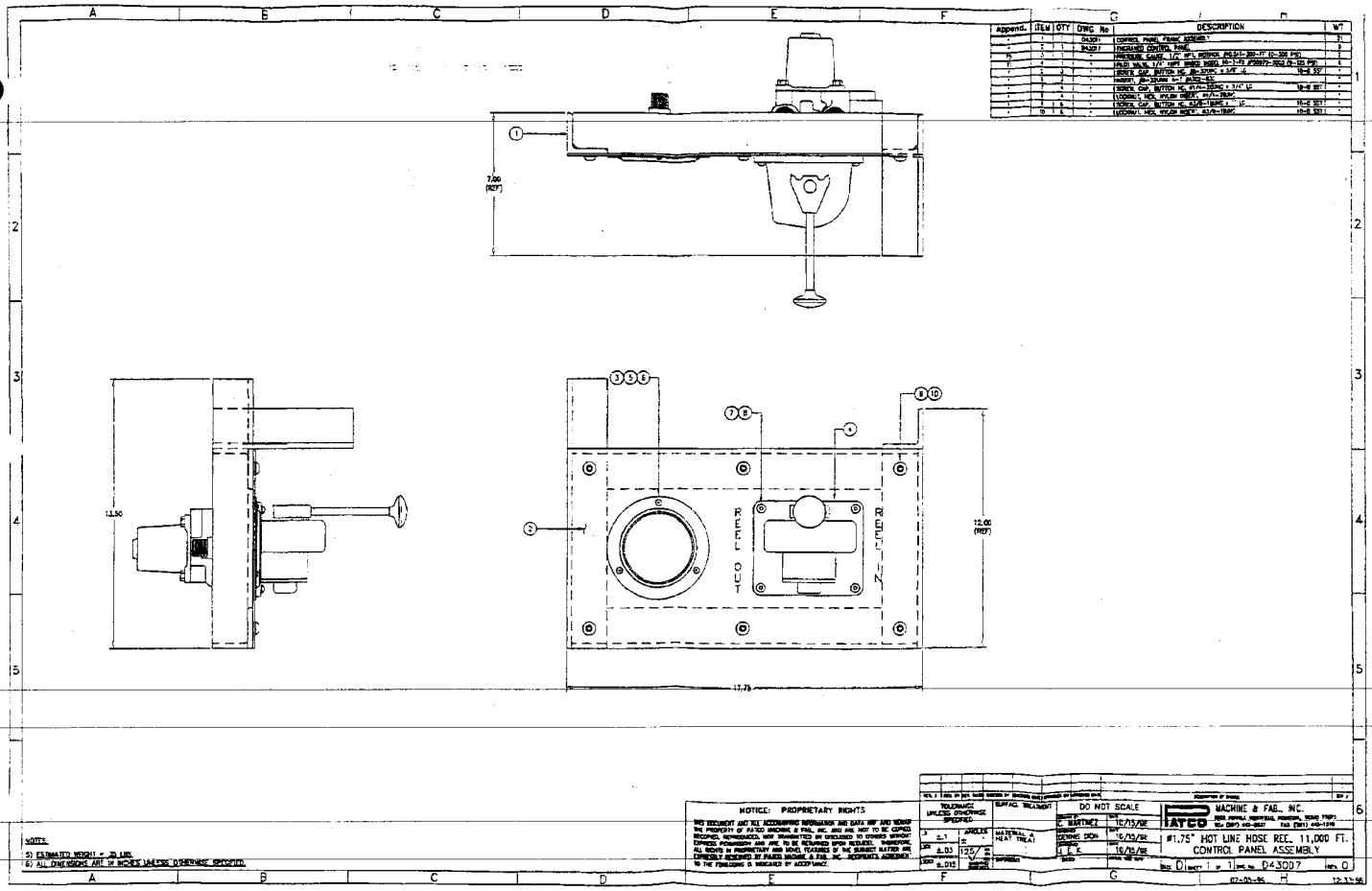
DESCRIPTION
WT
7.00 (REF)
13.50
12.00 (REF)
17.75
REEL OUT
REEL IN
NOTICE: PROPRIETARY RIGHTS
DO NOT SCALE
MACHINE & FAB., INC.
#1.75" HOT LINE HOSE REEL, 11,000 FT.
CONTROL PANEL ASSEMBLY
D43007

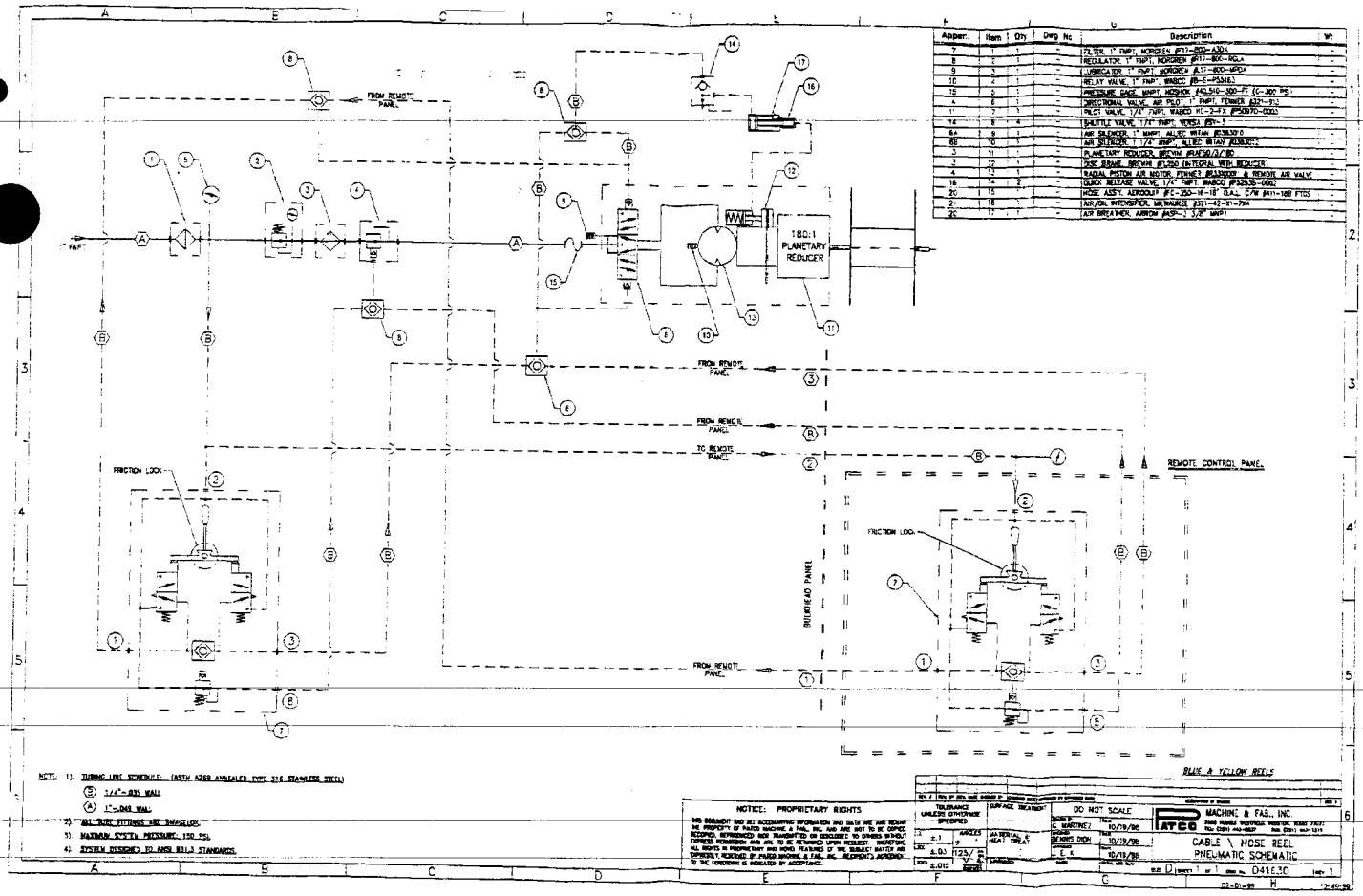


| Appear. | Item | Qty | Dwg No. | Description | W: |
|---|---|---|---|---|---|
| 7 | | 1 | - | FILTER, 1" FNPT, NORGREN #F71-600-A3DA | - |
| 8 | 2 | 1 | - | REGULATOR, 1" FNPT, NORGREN #R17-800-RGLA | - |
| 9 | 3 | 1 | - | LUBRICATOR, 1" FNPT, NORGREN #L17-800-MPDA | - |
| 10 | 4 | 1 | - | RELAY VALVE, 1" FNPT, WABCO #8-5-P53181 | - |
| 15 | 5 | 1 | - | PRESSURE GAGE, MNPT, NOSHOK #45,340-300-FF (0-300 PSI) | - |
| 4 | 6 | 1 | - | DIRECTIONAL VALVE, AIR PILOT, 1" FNPT, FENNER #371-912 | - |
| 11 | 7 | 1 | - | PILOT VALVE, 1/4" FNPT, WABCO #0-2-FX #P50970-0003 | - |
| 14 | 8 | 4 | - | SHUTTLE VALVE, 1/4" FNPT, VERSA #SV-5 | - |
| 6A | 9 | 1 | - | AIR SILENCER, 1" MNPT, ALLIED #NIAM #CM3070 | - |
| 6B | 10 | 1 | - | AIR SILENCER, 1/2" MNPT, ALLIED #NIAM #CM3062 | - |
| 3 | 11 | 1 | - | PLANETARY REDUCER, BROWN #PAF60/3/180 | - |
| 3 | 12 | 1 | - | DISC BRAKE, BROWN #1250 (INTEGRAL WITH REDUCER) | - |
| 4 | 13 | 1 | - | RADIAL PISTON AIR MOTOR, FENNER #BA3000R & REMOTE AIR VALVE | - |
| 16 | 14 | 2 | - | QUICK RELEASE VALVE, 1/4" FNPT, WABCO #P52836-0002 | - |
| 20 | 15 | 1 | - | HOSE ASSY, AEROQUIP #FC-350-16-18" O.A.L. C/W #411-188 FITTS | - |
| 21 | 16 | 1 | - | AIR/OIL INTENSIFIER, MILWAUKEE #321-42-01-794 | - |
| 20 | 17 | 1 | - | AIR BREATHER, AIRFLOW #ASF-1 3/8" MNPT | - |

## 5.0 COMPONENT TECHNICAL DESCRIPTION

Appendix "1" through "22" contain commercial vendor supplied technical information on all components purchased for the Patco Blue 11,000 Ft. Hot Line Hose Reel. Table 5-1 summarizes all the mechanical and pneumatic components used on the reels. For a quick reference, the pneumatic schematic is presented on Patco drawing D41630, Revision 1. The component technical description included the following:

*Reference Item Number*

*Quantity*

*Part Description*

*Manufacturer*

*Part Number*

Physical and operating parameters are presented and where available service manuals are included. Two sources are included for the components:

*The Houston, Texas, U.S.A. Source*

*The Manufacturer of the Component*



Confidential Treatment Requested by Transocean Holdings LLC TRN-HCEC-00002107

CONFIDENTIAL TRN-MDL-00043844

TABLE 5.1

PATCO 11,000 Ft. HOT LINE HOSE REEL

| Item # | Description | Manufacturer | Part No. | Appendix |
|---|---|---|---|---|
| 8 | Hydraulic Swivel | Patco Mach. & Fab. | D41813 | 1 |
| 10 | Pillow Block | Dodge-Rockwell | 023039, 5" Shaft | 2 |
| 2* | Planetary Reducer | Brevini | RAF50/3/180/FL250 | 3 |
| 3* | Air Motor | Fenner Fluid Power | R33XXXR1 | 4A |
| 3* | Directional Valve | Fenner Fluid Power | 321-913 | 4B |
| 3** | Sprocket | Patco Mach. & Fab. | B41514 | 5 |
| 4* | Air Silencer | Allied Witan | 038010, 1" MNPT | 6A |
| 5* | Air Silencer | Allied Witan | 0383012, 1-1/4" MNPT | 6B |
| 11 | Air Filter | Norgren | F17-800-A3DA | 7 |
| 12 | Air Regulator | Norgren | R17-800-RGLA | 8 |
| 13 | Air Lubricator | Norgren | L17-800-MPDA | 9 |
| 14 | Relay Valve | Wabco | 8-S-P55163 | 10 |
| 4*** | Pilot Valve | Wabco (Rexroth) | HD-2-FX- P50970-0003 | 11 |
| 9 | Sprocket (L.W.) | Martin | 40BS35, 2 ½" Bore | 12 |
| 18 | Roller Chain | Rex | ANSI 40 | 13 |
| 8**** | Shuttle Valve | Versa | SV-3 | 14 |



Confidential Treatment Requested by Transocean Holdings LLC TRN-HCEC-00002108

CONFIDENTIAL TRN-MDL-00043845

TABLE 5.1

PATCO 11,000 Ft. HOT LINE HOSE REEL

| Item # | Description | Manufacturer | Part No. | Appendix |
|---|---|---|---|---|
| 3*** | Pressure Gauge | Noshok | 40.510-300-FF | 15 |
| 14**** | Quick Release | Wabco | P52935-0002 | 16 |
| 18** | Flange Bearing | Dodge-Reliance | 124125, 1-1/2" Shaft | 17 |
| 15**** | Hose Assembly | Aeroquip | FC-350-16-30 " O.A.L. c/w 411-16B Fittings each end | 18 |
| 14* | Power Lok Booster | Milwaukee Cyl. | BD42, 2 ½" Bore, 1" Ram, 4" Stroke | 19 |
| 15* | Exhaust Muffler | Arrow | ASP-3 | 20 |

* Reference Patco Drawing D43003
** Reference Patco Drawing D43005
*** Reference Patco Drawing D43007
**** Reference Patco Drawing D41630



Confidential Treatment Requested by Transocean Holdings LLC TRN-HCEC-00002109

CONFIDENTIAL TRN-MDL-00043846

fidential Treatment Requested by Transocean Holdings LLC TRN-HCEC-00002110

CONFIDENTIAL TRN-MDL-00043847

## APPENDIX 1

*Hot Line Hose Reel*
COMPONENT DESCRIPTION

*Reference Item No.:* 8

*Quantity Required:* 1 per reel

*Description:* Hydraulic Swivel

*Manufacturer:* Patco Machine & Fab., Inc.

*Part Number:* D41813

*Source:* Houston, Texas

Patco Machine & Fab., Inc.
2002 Humble Westfield
Houston, Texas 77073-2510

Telephone: 281-443-2837
Telefax: 281-443-1319

Manufacturer

Patco Machine & Fab., Inc.
2002 Humble Westfield
Houston, Texas 77073-2510

Telephone: 281-443-2837
Telefax: 281-443-1319



Confidential Treatment Requested by Transocean Holdings LLC TRN-HCEC-00002111

CONFIDENTIAL TRN-MDL-00043848

| Item | Qty | Dwg. No | Description | | Wt. |
|---|---|---|---|---|---|
| 1 | 1 | D41813 | ROTARY SWIVEL HYDRAULIC ADAPTER | TYPE 316 SST | 2 |
| 2 | 1 | - | SWIVEL ROTARY SYSTEMS #00267 | TYPE 316 SST | 9 |
| 3 | 1 | - | SOCKET WELD FLANGE, 1" SAE 4 BOLT, FLAT FACE, CODE 62 | | 2 |
| | | | CLAMPON #7617-16-16, TYPE 316 SST | | |

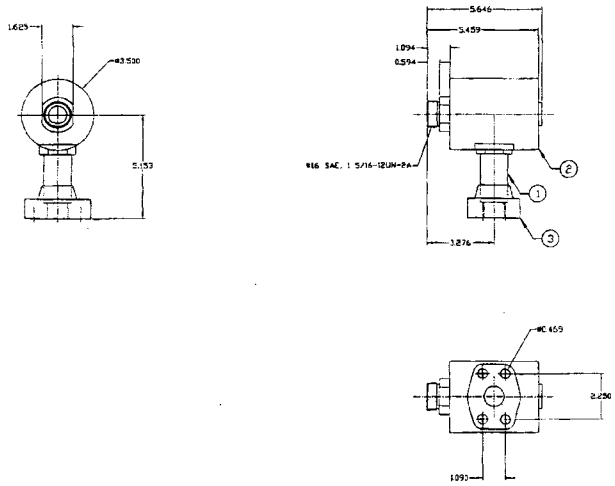


NOTES:
1) ALL WELDS TO BE FREE OF PINHOLES, UNDERCUTS, WELD SLAG AND SPATTER.
2) UNLESS NOTED, SIZE OF WELD TO BE EQUAL TO THE THICKNESS OF THE SMALLER BASE METAL TO BE JOINED.
3) TYPE OF WELD IS DETERMINED BY THE TYPE OF JOINT.
4) WELDS TO BE ALL AROUND, SEAL WELD.
5) ESTIMATED WEIGHT = 20.0 LBS.
6) ALL DIMENSIONS ARE IN INCHES UNLESS OTHERWISE SPECIFIED.

NOTICE: PROPRIETARY RIGHTS
THIS DOCUMENT AND ALL INCORPORATED INFORMATION AND DATA FOR, AND PROGRAM THE PROPERTY OF PATCO MACHINE & FAB., INC. AND ARE NOT TO BE COPIED, REPRODUCED, REPRODUCED, NOR TRANSMITTED OR DISCLOSED TO OTHERS WITHOUT EXPRESS PERMISSION AND ARE TO BE USED WITHIN SUBJECT MANUFACTURE. ALL RIGHTS IN PROPRIETARY AND NOVEL FEATURES OF THE SUBJECT MATTER ARE EXPRESSLY RESERVED BY PATCO MACHINE & FAB., INC. RECIPIENT'S AGREEMENT TO THE FOREGOING IS INDICATED BY ACCEPTANCE OF THIS DOCUMENT.

TOLERANCE UNLESS OTHERWISE SPECIFIED: X ±.1; ANGLES ±1/2°; XX ±.03; RADII ±.015

SURFACE TREATMENT: MATERIAL & HEAT TREAT

DO NOT SCALE

| | | |
|---|---|---|
| DRAWN | D. DRON | 05/07/98 |
| CHECKED | G. DIGH | 05/08/98 |
| APPROVED | J.E.R. | 05/08/98 |

PATCO MACHINE & FAB. INC.
9999 HOUSTON NORTHWEST, HOUSTON, TEXAS 77073
TEL (281) 443-9537 FAX (281) 443-1311

#1.36 HOT LINE HOSE REEL
HYDRAULIC SWIVEL PIPING

SIZE D SHEET 1 OF 1 DWG. NO. D41813 REV. 0

25-06-98 09:50:01

## APPENDIX 2

*Hot Line Hose Reel*
COMPONENT DESCRIPTION

*Reference Item No.:* 10

*Quantity Required:* 1 per reel

*Description:* Pillow Block

*Manufacturer:* Dodge, Reliance Electric

*Part Number:* 023039, 5" Diameter

*Source:* Houston, Texas

Sepco Industries, Inc.
112 North 12th Street
LaPorte, Texas 77571

Telephone: 281-471-6241
Telefax: 281-471-4088

Manufacturer

Dodge, Reliance Electric
P.O. Box 499
2 Roper Court
Greenville, S.C. 29607

Telephone: 864-297-4800
Telefax: 864-281-2318



Confidential Treatment Requested by Transocean Holdings LLC TRN-HCEC-00002114

CONFIDENTIAL TRN-MDL-00043851

# TYPE E Tapered Roller Bearings

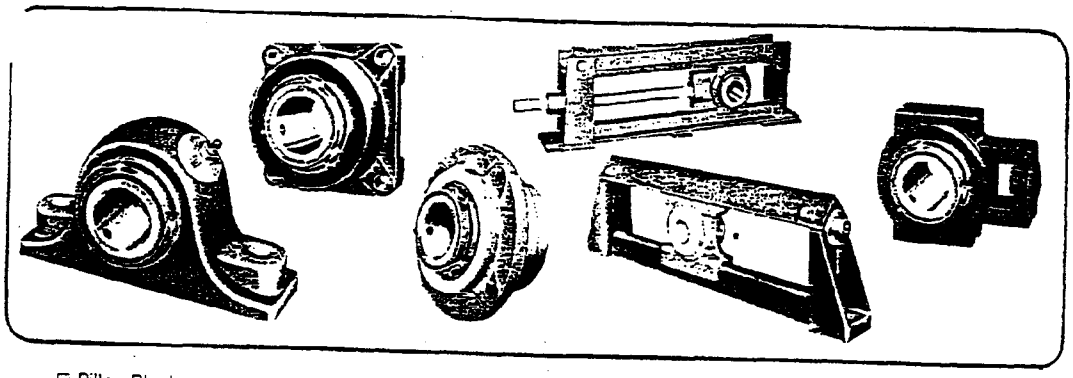

- ☐ Pillow Blocks
- ☐ Standard and Piloted Flange Bearings
- ☐ Top Angle and Protected Screw Take-Ups
- ☐ Wide Slot Take-Up Bearings

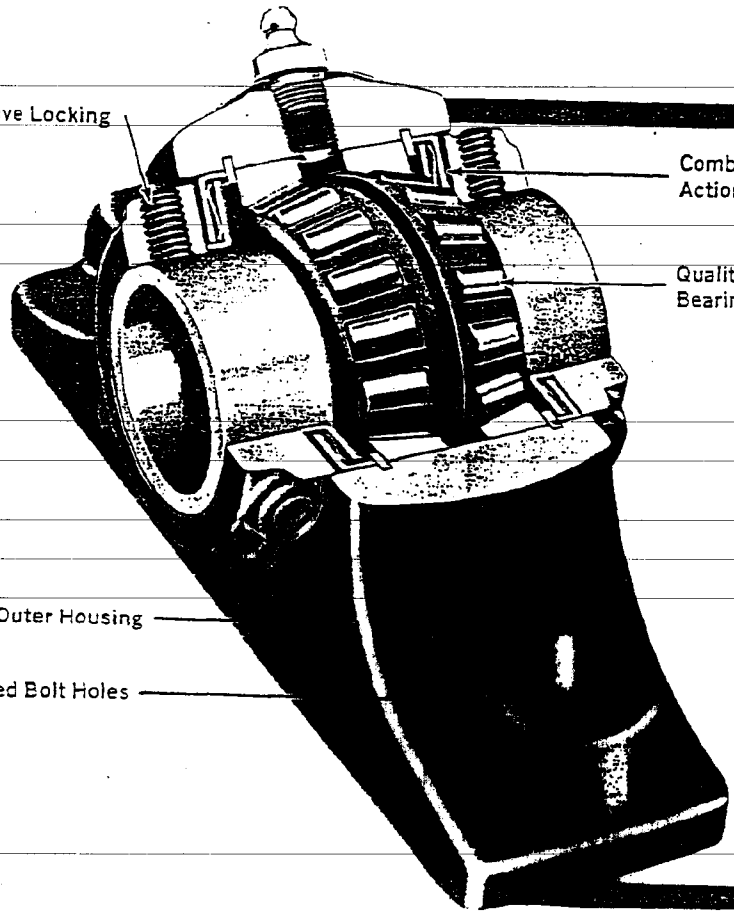


B3-6

Rugged Type E pillow blocks offer a positive locking to the shaft, come in a wide range of sizes and styles yet are low in cost. In fact this double collar roller bearing is priced comparable to most single collar roller bearings offered by other manufacturers.

Shipped ready to slip on the shaft they are completely assembled, adjusted, sealed and pre-lubricated at the factory. This exceptional value is backed up by over 30 years of experience in the manufacture and application of Type E pillow blocks. Several millions of these units have been sold for industrial use providing years of trouble-free service with a minimum of maintenance.

Standard and piloted flange bearings, wide slot take-up bearings, protected screw and top angle take-ups are also available with the same quality features described above.

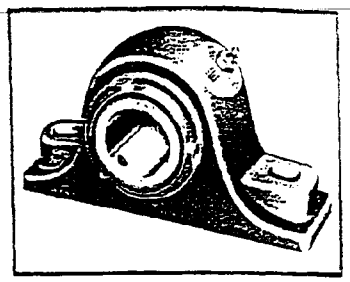

LOAD RATINGS—B3-13.

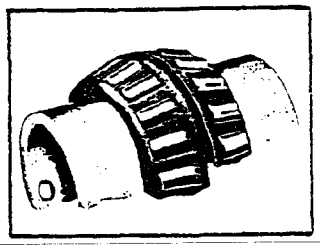

**Quality Anti-Friction Bearing**
The use of case hardened tapered rollers made of a superior grade of steel, results in unsurpassed load handling characteristics and longer, useful bearing life. The *long inner race* balances the load distribution over a considerable length of shaft. Bearings have *high radial and thrust load capacity* making them suitable for most combinations of radial and thrust loading. The arrangement of the rollers and races enables blocks to handle slight angular misalignment, covering the need of many applications.

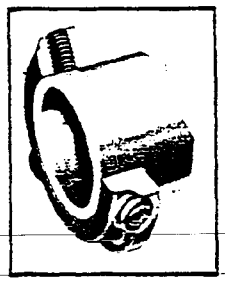

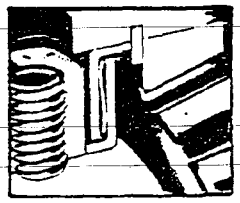

**Combination Sealing Action**
Balanced labyrinth and Dynafacet seal combines labyrinth and rubbing action. *Most effective seal in the industry!* Seals against loss of lubricants; protecting bearings in dusty and dirty environments—*on the shaft or off!* Sealing efficiency is maintained thru-out the full range of self-alignment
† U.S. Pat. No. 3,499,654

**Positive Locking, Both Ends!** Inner race is securely fastened to the shaft by two Springlok collars. Each collar uses two set screws @ 120° for additional holding power. These screws extend thru holes in the race, locking the bearing to the shaft. Both collars act as rotating flingers to help keep contaminants away from the seal.

**Rugged Outer Housing**
All Type E housings are expertly designed to be compact without sacrificing the ruggedness which is characteristic of all Dodge Mounted Bearings. Cast of gray iron, in 2 and 4-bolt base styles; all *mounting surfaces are fully machined.* Cast steel pillow blocks are available at extra cost. Ductile iron and other cast steel housings can be furnished on special order at extra cost.

**Elongated Bolt Holes**
provide lateral adjustment which facilitates mounting.

**Construction**
Referring to the cross section view on opposite page, snap rings and shims are used for proper adjustment on bore sizes up thru 3". For 3 3/16 thru 5" sizes an adjusting nut is used. Larger sizes use a shimmed end plate which is fastened to the housing. Bore tolerances are +.001" −.000" for 3" and smaller bores and +.002" −.000" for bores larger than 3".

**Selection**
See page B3-12. Popular sizes from 1 3/16-7" are carried in factory and distributors' stock. (The 7" bore is the largest offered in the industry for a comparable pillow block).

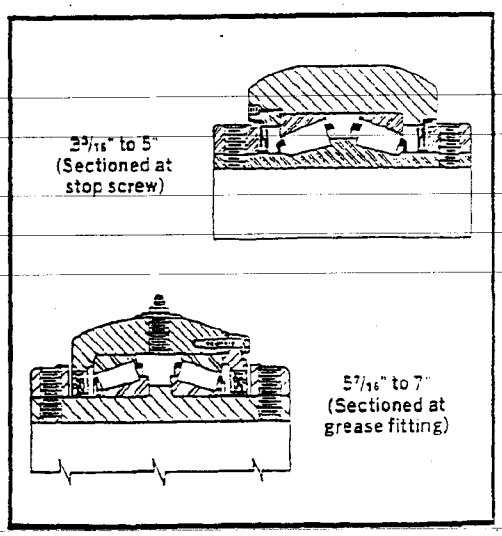




Confidential Treatment Requested by Transocean Holdings LLC TRN-HCEC-00002116

CONFIDENTIAL TRN-MDL-00043853

# Type E Pillow Blocks
## with Tapered Roller Bearings

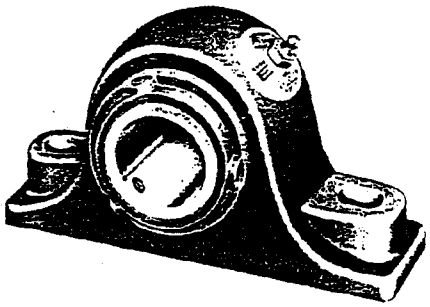

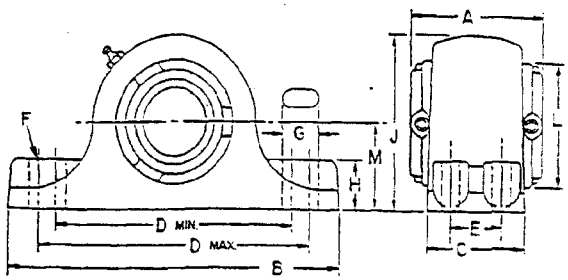


### Type E Pillow Blocks (non-expansion type)

| Shaft Size ▲ | Gray Iron Housing* 2-Bolt Base* Part No. | Wt. | 4-Bolt Base Part No. | Wt. | Steel Housing† 2-Bolt Base Part No. |
|---|---|---|---|---|---|
| 1 3/16 | 060360 | 4.3 | ..... | .... | 060070 |
| 1 1/4 | 060359 | 4.1 | ..... | .... | 060071 |
| 1 3/8 | 060370 | 7.6 | ..... | .... | 060072 |
| 1 7/16 | 060361 | 7.4 | ..... | .... | 060073 |
| 1 1/2 | 060371 | 10.8 | ..... | .... | 060074 |
| 1 5/8 | 060372 | 10.6 | ..... | .... | 060075 |
| 1 11/16 | 060362 | 10.4 | ..... | .... | 060076 |
| 1 3/4 | 060373 | 12.2 | ..... | .... | 060077 |
| 1 7/8 | 060352 | 12.0 | ..... | .... | 060078 |
| 1 15/16 | 060363 | 11.8 | ..... | .... | 060079 |
| 2 | 060374 | 11.6 | ..... | .... | 060080 |
| 2 3/16 | 060364 | 15.0 | ..... | .... | 060081 |
| 2 1/4 | 060375 | 22.0 | 060341† | 22.5 | 060082 |
| 2 7/16 | 060365 | 20.5 | 060342 | 21.0 | 060083 |
| 2 1/2 | 060376 | 19.1 | 060343 | 19.6 | 060084 |
| 2 11/16 | 060367 | 29.8 | 060344 | 30.9 | 060085 |
| 2 3/4 | 060353 | 29.0 | 060345† | 30.0 | 060086 |
| 2 15/16 | 060366 | 28.2 | 060346 | 29.3 | 060087 |
| 3 | 060377 | 27.4 | 060347 | 28.8 | 060088 |
| 3 3/16 | 060358 | 48.0 | 060348† | 48.4 | 060089 |
| 3 1/4 | 060354 | 47.2 | 060349† | 47.6 | 060090 |
| 3 7/16 | 060368 | 46.5 | 060350 | 47.0 | 060091 |
| 3 1/2 | 060355 | 45.9 | 060351 | 46.3 | 060092 |

| Shaft Size ▲ | Gray Iron Housing* 4-Bolt Base Part No. | Wt. | Steel Housing† 4-Bolt Base Part No. |
|---|---|---|---|
| 3 15/16 | 060369 | 70.1 | 060093 |
| 4 | 060399 | 69.5 | 060094 |
| 4 7/16 | 060378 | 90.4 | 060095 |
| 4 1/2 | 060356 | 89.0 | 060096 |
| 4 15/16 | 060379 | 136.0 | 060097 |
| 5 | ~~060357~~ | 132.6 | 060098 |
| 5 7/16 | 060063 | 153 | ..... |
| 5 15/16 | 060065 | 143 | ..... |
| 6 | 060066 | 140 | ..... |
| 6 7/16 | 060067 | 210 | ..... |
| 6 1/2 | 060068 | 208 | ..... |
| 6 15/16 | 060069 | 198 | ..... |
| 7 | 060099 | 193 | ..... |

Note—Ductile iron housings can be furnished, made-to-order. Consult factory for price and delivery.

▲ Sizes not listed will be priced on application. For recommended shaft tolerances, see table 1 on page B1-3.

* Furnished unless otherwise specified.

† Assembled to order sizes. Consult factory for delivery.

| Shaft Size | A | B | C 2-Bolt Base | C 4-Bolt Base | D 2-Bolt Base Min. | D 2-Bolt Base Max. | D 4-Bolt Base Min. | D 4-Bolt Base Max. | 2-Bolt Base F Bolts | 4-Bolt Base E | 4-Bolt Base F Bolts | G | H | J | L | M |
|---|---|---|---|---|---|---|---|---|---|---|---|---|---|---|---|---|
| 1 3/16, 1 1/4 | 2 3/4 | 6 | 1 7/8 | .... | 4 9/16 | 5 | .... | .... | 3/8 | .... | .... | 19/32 | 7/8 | 3 | 2 1/4 | 1 1/2 |
| 1 3/8, 1 7/16 | 3 | 7 3/8 | 2 1/8 | .... | 5 1/2 | 6 | .... | .... | 1/2 | .... | .... | 3/4 | 1 1/8 | 3 3/4 | 2 3/4 | 1 7/8 |
| 1 1/2, 1 5/8, 1 11/16 | 3 3/8 | 7 7/8 | 2 3/8 | .... | 6 | 6 1/2 | .... | .... | 1/2 | .... | .... | 3/4 | 1 1/4 | 4 1/4 | 3 3/16 | 2 1/8 |
| 1 3/4, 1 7/8, 1 15/16, 2 | 3 1/2 | 8 7/8 | 2 1/2 | .... | 6 3/4 | 7 1/4 | .... | .... | 5/8 | .... | .... | 7/8 | 1 5/16 | 4 1/2 | 3 7/16 | 2 1/4 |
| 2 3/16 | 3 3/4 | 9 5/8 | 2 5/8 | .... | 7 1/2 | 8 | .... | .... | 5/8 | .... | .... | 7/8 | 1 1/2 | 5 | 3 3/4 | 2 1/2 |
| 2 1/4, 2 7/16, 2 1/2 | 4 | 10 1/2 | 2 7/8 | 3 1/2 | 8 1/4 | 8 3/4 | 8 1/4 | 8 3/4 | 5/8 | 1 7/8 | 5/8 | 7/8 | 1 5/8 | 5 1/2 | 4 1/16 | 2 3/4 |
| 2 11/16, 2 3/4, 2 15/16, 3 | 4 1/2 | 12 | 3 | 4 | 9 9/16 | 9 13/16 | 9 1/8 | 9 7/8 | 3/4 | 2 1/8 | 5/8 | 1 1/16 | 1 7/8 | 6 1/4 | 4 23/32 | 3 1/8 |
| 3 3/16, 3 1/4, 3 7/16, 3 1/2 | 5 | 14◆ | 3 5/8 | 4 1/2 | 10 13/16 | 11 5/16 | 10 9/16 | 11 3/16 | 7/8 | 2 3/8 | 3/4 | 1 3/16 | 2 1/4 | 7 1/2 | 5 7/16 | 3 3/4 |
| 3 15/16, 4 | 6 1/4 | 15 1/4 | .... | 4 1/2 | .... | .... | 12 1/8 | 12 7/8 | .... | 2 1/4 | 3/4 | 1 1/8 | 2 7/16 | 8 1/2 | 5 15/16 | 4 1/4 |
| 4 7/16, 4 1/2 | 6 3/4 | 16 5/8 | .... | 4 5/8 | .... | .... | 13 1/8 | 13 7/8 | .... | 2 1/2 | 3/4 | 1 1/8 | 2 3/4 | 9 3/8 | 6 29/32 | 4 3/4 |
| 4 15/16, 5 | 7 1/4 | 18 1/2 | .... | 5 1/8 | .... | .... | 15 1/8 | 15 7/8 | .... | 2 7/8 | 7/8 | 1 1/4 | 3 | 10 7/8 | 7 13/32 | 5 1/2 |
| 5 7/16, 5 15/16, 6 | 9 | 22 | .... | 6 1/4 | .... | .... | 17 1/4 | 19 1/4 | .... | 3 3/4 | 1 | 2 | 3 1/4 | 13 1/16 | 9 1/8 | 6 11/16 |
| 6 7/16, 6 1/2, 6 15/16, 7 | 10 1/2 | 26 | .... | 7 1/8 | .... | .... | 21 1/4 | 23 1/4 | .... | 4 5/8 | 1 | 2 | 3 11/16 | 14 15/16 | 10 11/16 | 7 1/2 |

◆ This dimension is 13 1/2" for 4-Bolt Base.



Confidential Treatment Requested by Transocean Holdings LLC TRN-HCEC-00002117

CONFIDENTIAL TRN-MDL-00043854

Select a bearing from the opposite page having a radial load rating equal to or greater than the calculated "Equivalent Radial Load" for a desired L10 Life. This simple method is all that is required for the majority of general machine applications and provides for occasional average shock loads.

**L10 Hours Life**—is the life which may be expected from at least 90% of a given group of bearings operating under identical conditions. The average life (L50) will be approximately five times the L10 Life.

To determine the L10 Hours Life for loads and RPM's not listed use the following equation:

$$L10 = \left(\frac{C90}{F}\right)^{10/3} \times \frac{1,500,000}{RPM}$$

Where:
C90 = Dynamic Capacity found below
F = Equivalent Radial Load in lbs.

**Equivalent Radial Load**—Where the load on a duplex roller bearing is solely a radial load with no axial (thrust) load, the Equivalent Radial Load (P) is equal to the Actual Radial Load. However, where the bearing loading consists of both radial and thrust loads, these loads must be converted into an Equivalent Radial Load by the equation:

$$P = X F_R + Y F_A$$

**Thrust Loads**—Consider each bearing unit separately. The first step is to determine $F_A$, $F_R$, and K values on each bearing unit.

$F_A$ = Axial (Thrust) Load—see Table for Maximum
$F_R$ = Radial Load—see Table for Maximum
K = Bearing K-Factor
X = Radial Load Factor from Table below
Y = Thrust Load Factor from Table below

To find X and Y, first calculate $F_A/F_R$. Then use the following table to determine the X and Y values. Substitute all known values into the Equivalent Radial Load equation.

This procedure combines the radial and axial (thrust) load into an Equivalent Radial Load (P) which yields the same life as the combined radial and axial load.

**Long Life**—Extreme dependability—for a L10 Hours Life other than 30,000 hours and not shown, multiply the Equivalent Radial Load by one of the following factors. Then select a bearing from the bold face (30,000) ratings only on the opposite page having a rating equal to or greater than this value. For 20,000 L10 Hours Life use factor of .87; 40,000—1.10; 60,000—1.25; 80,000—1.38.

**Heavy Service**—For heavy shock loads, frequent shock loads, or severe vibrations add up to 50% (according to severity of conditions) to the Equivalent Radial Load to obtain a Modified Equivalent Radial Load. Consult Application Engineers for additional selection assistance.

Each bearing unit is a two-row (duplex) bearing consisting of two identical bearings mounted back to back. Loading of this style of bearing unit is one of three cases:

CASE 1:
No thrust load exists. All loading is pure radial ($F_A$). $F_R$ is shared between each bearing in the duplex unit and is equal to the Equivalent Radial Load (P).

If $F_A = 0$, then $P = F_R$.

CASE 2:
Light thrust loads exist. Each bearing in the duplex bearing unit has different loads. The bearing farthest from the thrust load will carry half the radial load and a majority of the thrust load. The bearing nearest the thrust load will carry half the radial load and a minority of the thrust load.

$$F_A / F_R \leq e$$

Where e = .6/K.

CASE 3:
Heavy thrust loads. All loads will be carried by the bearing opposite thrust.

$$F_A / F_R > e$$

Where e = .6/K.

For example selection tapered roller bearing problems see page B3-35.

| SHAFT SIZE | e | Case 2 If $F_A/F_R \leq e$ | | Case 3 If $F_A/F_R > e$ | | DYNAMIC CAPACITY C 90 (Lbs.) | K | MAXIMUM RPM | MAXIMUM | | MAXIMUM $F_A$ PILOTED FLANGE Only |
|---|---|---|---|---|---|---|---|---|---|---|---|
| | | X | Y | X | Y | | | | $F_A$ | $F_R$ | |
| 1 3/16-1 1/4 | .49 | .87 | 1.77 | .70 | 2.14 | 2,680 | 1.23 | 4,490 | 1,100 | 5,100 | 1,100 |
| 1 3/8-1 7/16 | .46 | .87 | 1.89 | .70 | 2.28 | 4,290 | 1.31 | 3,820 | 1,100 | 5,100 | 1,100 |
| 1 1/2-1 11/16 | .44 | .87 | 1.96 | .70 | 2.37 | 5,530 | 1.36 | 3,320 | 1,400 | 5,100 | 1,200 |
| 1 3/4-2 | .33 | .87 | 2.64 | .70 | 3.18 | 7,270 | 1.83 | 3,050 | 1,400 | 7,400 | 1,400 |
| 2 3/16 | .36 | .87 | 2.38 | .70 | 2.87 | 7,720 | 1.65 | 2,730 | 1,400 | 7,400 | 1,400 |
| 2 1/4-2 1/2 | .40 | .87 | 2.17 | .70 | 2.63 | 8,210 | 1.51 | 2,420 | 2,400 | 7,400 | 1,650 |
| 2 11/16-3 | .46 | .87 | 2.87 | .70 | 2.26 | 8,680 | 1.30 | 2,060 | 2,800 | 12,000 | 2,800 |
| 3 3/16-3 1/2 | .50 | .87 | 1.71 | .70 | 2.07 | 13,800 | 1.19 | 1,640 | 5,550 | 9,000 | 2,800 |
| 3 15/16-4 | .49 | .87 | 1.77 | .70 | 2.14 | 18,900 | 1.23 | 1,530 | 8,400 | 14,400 | 8,400 |
| 4 7/16-4 1/2 | .53 | .87 | 1.63 | .70 | 1.97 | 23,200 | 1.13 | 1,360 | 11,250 | 17,000 | 11,250 |
| 4 15/16-5 | .47 | .87 | 1.83 | .70 | 2.21 | 32,000 | 1.27 | 1,200 | 11,250 | 20,000 | 11,250 |
| 5 7/16-6 | .49 | .87 | 1.76 | .70 | 2.12 | 36,600 | 1.22 | 1,080 | 11,250 | 22,000 | — |
| 6 7/16-7 | .54 | .87 | 1.61 | .70 | 1.95 | 57,700 | 1.12 | 1,140 | 15,750 | 40,000 | — |

**L10 Life Adjustment**—The calculated L10 Life obtained from the above procedure is subject to life adjustment factors in accordance with AFBMA standards described on page B1-4. Consult Application Engineering for assistance.

**Comparing to a Spherical Roller Bearing**—The dynamic capacities C 90 (tapered) and C (spherical) are not the same. For both types of bearings, the C 90 values are 25.9% of the C value. To select and then compare these bearings use the complete selection procedure for each type of bearing.



Confidential Treatment Requested by Transocean Holdings LLC TRN-HCEC-00002118

CONFIDENTIAL TRN-MDL-00043855

# SELECTION
## Type E Roller Bearing

| Shaft Size | L10 Hours Life | Allowable Equivalent Radial Load Rating (Lbs.) at Various Revolutions Per Minute | | | | | | | | | | | | |
|---|---|---|---|---|---|---|---|---|---|---|---|---|---|---|
| | | 50 | 100 | 250 | 500 | 750 | 1000 | 1250 | 1500 | 1750 | 2000 | 2500 | 3000 | 3500 |
| 1 3/16 | 5,000 | 4590 | 3725 | 2830 | 2300 | 2035 | 1870 | 1745 | 1655 | 1580 | 1515 | 1420 | 1345 | 1280 |
| 1 1/4 | 10,000 | 3725 | 3025 | 2300 | 1870 | 1655 | 1515 | 1420 | 1345 | 1280 | 1230 | 1150 | 1090 | 1040 |
| | 30,000 | 2680 | 2175 | 1655 | 1345 | 1190 | 1090 | 1020 | 963 | 920 | 885 | 830 | 785 | 750 |
| | 50,000 | 2300 | 1870 | 1420 | 1150 | 1020 | 935 | 875 | 830 | 790 | 760 | 710 | 675 | 645 |
| | 100,000 | 1870 | 1515 | 1150 | 935 | 830 | 760 | 710 | 675 | 645 | 620 | 580 | 545 | 520 |
| 1 3/8 | 5,000 | 5100 | 5100 | 4530 | 3680 | 3260 | 2990 | 2795 | 2545 | 2525 | 2430 | 2270 | 2150 | 2055 |
| 1 7/16 | 10,000 | 5100 | 4645 | 3680 | 2990 | 2645 | 2430 | 2270 | 2150 | 2055 | 1970 | 1845 | 1745 | 1665 |
| | 30,000 | 4290 | 3485 | 2645 | 2150 | 1905 | 1745 | 1635 | 1545 | 1475 | 1420 | 1325 | 1255 | 1200 |
| | 50,000 | 3680 | 2990 | 2270 | 1845 | 1635 | 1500 | 1400 | 1325 | 1255 | 1215 | 1140 | 1080 | 1030 |
| | 100,000 | 2990 | 2430 | 1845 | 1500 | 1325 | 1215 | 1140 | 1080 | 1030 | 990 | 925 | 875 | 835 |
| 1 1/2 | 5,000 | 5100 | 5100 | 5100 | 4745 | 4200 | 3855 | 3605 | 3410 | 3250 | 3130 | 2925 | 2770 | 2645 |
| 1 5/8 | 10,000 | 5100 | 5100 | 4745 | 3855 | 3410 | 3130 | 2925 | 2770 | 2645 | 2540 | 2380 | 2250 | 2150 |
| 1 11/16 | 30,000 | 5100 | 4490 | 3410 | 2770 | 2455 | 2250 | 2105 | 1995 | 1905 | 1830 | 1710 | 1620 | 1545 |
| | 50,000 | 4745 | 3855 | 2925 | 2380 | 2105 | 1930 | 1805 | 1710 | 1635 | 1570 | 1465 | 1390 | 1325 |
| | 100,000 | 3855 | 3130 | 2380 | 1930 | 1710 | 1570 | 1465 | 1390 | 1325 | 1275 | 1190 | 1130 | 1075 |
| 1 3/4 | 5,000 | 7400 | 7400 | 7400 | 6235 | 5525 | 5065 | 4740 | 4485 | 4285 | 4115 | 3850 | 3645 | |
| 1 7/8 | 10,000 | 7400 | 7400 | 6235 | 5065 | 4485 | 4115 | 3850 | 3645 | 3480 | 3340 | 3125 | 2960 | |
| 1 15/16 | 30,000 | 7270 | 5905 | 4485 | 3645 | 3225 | 2960 | 2770 | 2620 | 2500 | 2405 | 2250 | 2130 | |
| 2 | 50,000 | 6235 | 5065 | 3850 | 3125 | 2770 | 2540 | 2375 | 2250 | 2145 | 2060 | 1930 | 1825 | |
| | 100,000 | 5065 | 4115 | 3125 | 2540 | 2250 | 2060 | 1930 | 1825 | 1745 | 1675 | 1565 | 1485 | |
| 2 3/16 | 5,000 | 7400 | 7400 | 7400 | 6625 | 5865 | 5380 | 5030 | 4765 | 4550 | 4370 | 4085 | 3870 | |
| | 10,000 | 7400 | 7400 | 6625 | 5380 | 4765 | 4370 | 4085 | 3870 | 3695 | 3550 | 3320 | 3145 | |
| | 30,000 | 7400 | 6270 | 4765 | 3870 | 3425 | 3145 | 2940 | 2785 | 2655 | 2555 | 2385 | 2260 | |
| | 50,000 | 6625 | 5380 | 4085 | 3320 | 2940 | 2695 | 2520 | 2385 | 2280 | 2190 | 2050 | 1940 | |
| | 100,000 | 5380 | 4370 | 3320 | 2695 | 2385 | 2190 | 2050 | 1940 | 1850 | 1780 | 1665 | 1575 | |
| 2 1/4 | 5,000 | 7400 | 7400 | 7400 | 7045 | 6235 | 5720 | 5350 | 5065 | 4835 | 4645 | 4345 | | |
| 2 7/16 | 10,000 | 7400 | 7400 | 7045 | 5720 | 5065 | 4645 | 4345 | 4115 | 3930 | 3775 | 3530 | | |
| 2 1/2 | 30,000 | 7400 | 6670 | 5065 | 4115 | 3645 | 3340 | 3125 | 2960 | 2825 | 2715 | 2540 | | |
| | 50,000 | 7045 | 5720 | 4345 | 3530 | 3125 | 2865 | 2680 | 2540 | 2425 | 2330 | 2180 | | |
| | 100,000 | 5720 | 4645 | 3530 | 2865 | 2540 | 2330 | 2180 | 2060 | 1970 | 1890 | 1770 | | |
| 2 11/16 | 5,000 | 12000 | 12000 | 9170 | 7445 | 6595 | 6050 | 5655 | 5355 | 5115 | 4915 | | | |
| 2 3/4 | 10,000 | 12000 | 9805 | 7445 | 6050 | 5355 | 4915 | 4595 | 4350 | 4155 | 3990 | | | |
| 2 13/16 | 30,000 | 8680 | 7050 | 5355 | 4350 | 3850 | 3535 | 3305 | 3130 | 2985 | 2870 | | | |
| 3 | 50,000 | 7445 | 6050 | 4595 | 3730 | 3305 | 3030 | 2835 | 2585 | 2565 | 2460 | | | |
| | 100,000 | 6050 | 4915 | 3730 | 3030 | 2685 | 2460 | 2305 | 2180 | 2080 | 2000 | | | |
| 3 3/16 | 5,000 | 9000 | 9000 | 9000 | 9000 | 9000 | 9000 | 8995 | 8515 | 8130 | | | | |
| 3 1/4 | 10,000 | 9000 | 9000 | 9000 | 9000 | 8515 | 7810 | 7305 | 6915 | 6505 | | | | |
| 3 7/16 | 30,000 | 9000 | 9000 | 6515 | 6915 | 6125 | 5620 | 5255 | 4975 | 4750 | | | | |
| 3 1/2 | 50,000 | 9000 | 9000 | 7305 | 5935 | 5255 | 4820 | 4510 | 4270 | 4075 | | | | |
| | 100,000 | 9000 | 7810 | 5935 | 4820 | 4270 | 3915 | 3660 | 3465 | 3310 | | | | |
| 3 15/16 | 5,000 | 14400 | 14400 | 14400 | 14400 | 14360 | 13170 | 12320 | 11660 | | | | | |
| 4 | 10,000 | 14400 | 14400 | 14400 | 13170 | 11660 | 10700 | 10005 | 9470 | | | | | |
| | 30,000 | 14400 | 14400 | 11660 | 9470 | 8390 | 7695 | 7195 | 6815 | | | | | |
| | 50,000 | 14400 | 13170 | 10005 | 8125 | 7195 | 6600 | 6175 | 5845 | | | | | |
| | 100,000 | 13170 | 10700 | 8125 | 6600 | 5845 | 5360 | 5015 | 4745 | | | | | |
| 4 7/16 | 5,000 | 17000 | 17000 | 17000 | 17000 | 17000 | 16165 | 15120 | 14315 | | | | | |
| 4 1/2 | 10,000 | 17000 | 17000 | 17000 | 16165 | 14315 | 13130 | 12280 | 11630 | | | | | |
| | 30,000 | 17000 | 17000 | 14315 | 11630 | 10295 | 9445 | 8835 | 8365 | | | | | |
| | 50,000 | 17000 | 16165 | 12280 | 9975 | 8835 | 8105 | 7580 | 7175 | | | | | |
| | 100,000 | 16165 | 13130 | 9975 | 8105 | 7175 | 6580 | 6155 | 5830 | | | | | |
| 4 15/16 | 5,000 | 20000 | 20000 | 20000 | 20000 | 20000 | 20000 | 20000 | | | | | | |
| 5 | 10,000 | 20000 | 20000 | 20000 | 20000 | 19745 | 18110 | 16940 | | | | | | |
| | 30,000 | 20000 | 20000 | 19745 | 16040 | 14200 | 13025 | 12185 | | | | | | |
| | 50,000 | 20000 | 20000 | 16940 | 13760 | 12185 | 11175 | 10450 | | | | | | |
| | 100,000 | 20000 | 18110 | 13760 | 11175 | 9895 | 9080 | 8490 | | | | | | |
| 5 7/16 | 5,000 | 22000 | 22000 | 22000 | 22000 | 22000 | 22000 | | | | | | | |
| 5 15/16 | 10,000 | 22000 | 22000 | 22000 | 22000 | 22000 | 20715 | | | | | | | |
| 6 | 30,000 | 22000 | 22000 | 22000 | 18345 | 16245 | 14900 | | | | | | | |
| | 50,000 | 22000 | 22000 | 19375 | 15735 | 13935 | 12785 | | | | | | | |
| | 100,000 | 22000 | 20715 | 15735 | 12785 | 11320 | 10385 | | | | | | | |
| 6 7/16 | 5,000 | 40000 | 40000 | 40000 | 40000 | 40000 | 40000 | | | | | | | |
| 6 1/2 | 10,000 | 40000 | 40000 | 40000 | 40000 | 35605 | 32660 | | | | | | | |
| 6 15/16 | 30,000 | 40000 | 40000 | 35605 | 28920 | 25605 | 23490 | | | | | | | |
| 7 | 50,000 | 40000 | 40000 | 30545 | 24810 | 21970 | 20150 | | | | | | | |
| | 100,000 | 40000 | 32660 | 24810 | 20150 | 17845 | 16370 | | | | | | | |

Note: ©See Table on opposite page for Maximum RPM

© For 1 3/16 to 3 1/2 piloted flange bearing use the Type K Selection Table B3-21

Note: Because the allowable loads, especially at low speeds, are extremely high, be sure the shaft strength is adequate and pillow blocks are base loaded. When imposed load is horizontal, be sure hold-down bolts are adequate. If bearings are cap loaded, full details on load, speed, and shaft size should be referred to Application Engineering Department. Consult Application Engineering Department for speeds and loads greater than listed. (See page B1-3 for shaft tolerances).



Confidential Treatment Requested by Transocean Holdings LLC TRN-HCEC-00002119

CONFIDENTIAL TRN-MDL-00043856

# INSTRUCTION MANUAL

# for 3 3/16" to 5" and 80mm to 125 mm BORE DODGE® TYPE E BEARINGS

## INSTALLATION INSTRUCTIONS

**WARNING**

**To ensure that drive is not unexpectedly started, turn off and lock out or tag power source before proceeding. Failure to observe these precautions could result in bodily injury.**

1. Clean shaft and bore of bearing. Lubricate with light oil or antiseize compound.
2. Slip bearing into position.
3. Bolt bearing to support, using shims where necessary to align bearing. The effort required to turn the shaft should be the same before and after bolting bearing to the support.
4. Tighten set screws to the torque values shown in Table 1.

## LUBRICATION INSTRUCTIONS

**Storage or Special Shutdown** — If exposed to wet or dusty conditions or to corrosive vapors, extra protection is necessary: Add grease until it shows at the seals; rotate the bearing to distribute grease over the bearing. After storage or idle period, add a little fresh grease before running.

**High Speed Operation** — In the higher speed ranges too much grease will cause overheating. The amount of grease that the bearing will take for a particular high speed application can only be determined by experience — see "Operating Temperature." If excess grease in the bearing causes overheating, it will be necessary to remove grease fitting (also drain plug when furnished) to permit excess grease to escape. The bearing has been greased at the factory and is ready to run. When establishing a relubrication schedule, note that a small amount of grease at frequent intervals is preferable to a large amount at infrequent intervals.

**Operation in Presence of Dust, Water or Corrosive Vapors** — Under these conditions the bearing should contain as much grease as speed will permit, since a full bearing with consequent slight leakage is the best protection against entrance of foreign material. In the higher speed ranges too much grease will cause overheating — see "High Speed Operation" above. In the lower speed ranges it is advisable to add extra grease to a new bearing before putting into operation. Bearings should be greased as often as necessary (daily if required) to maintain a slight leakage at the seals.

**Average Operation** — This bearing has been greased at the factory and is ready to run. The following table is a general guide for relubrication. However, certain conditions may require a change of lubricating periods as dictated by experience. See "High Speed Operation" and "Operation in Presence of Dust, Water or Corrosive Vapors."

**Operating Temperature** — Abnormal bearing temperature may indicate faulty lubrication. Normal temperature may range from "cool to warm to the touch" up to a point "too hot to touch for more than a few seconds," depending on bearing size and speed, and surrounding conditions. Unusually high temperature accompanied by excessive leakage of grease indicates too much grease. High temperature with no grease showing at the seals, particularly if the bearing seems noisy, usually indicates too little grease. Normal temperature and a slight showing of grease at the seals indicate proper lubrication.

TABLE 1

Setscrew Torque

| Shaft Size | Setscrew Size | Tightening Torque |
|---|---|---|
| 3 3/16" — 3 1/2" | 1/2 — 13 | 620 IN.-LBS. |
| 3 15/16" — 5" | 5/8 — 11 | 1325 IN.-LBS. |
| 80 — 90MM | M12 | 57 NM |
| 100 — 125MM | M16 | 126 NM |

### Lubrication Guide

Read Preceeding Paragraphs Before Establishing Lubrication Schedule.

| Hours Run per Day | Suggested Lubrication Period in Weeks | | | | |
|---|---|---|---|---|---|
| | 1 to 250 RPM | 251 to 500 RPM | 501 to 750 RPM | 751 to 1000 RPM | 1001 to 1500 RPM |
| 8 | 12 | 12 | 10 | 7 | 5 |
| 16 | 12 | 7 | 5 | 4 | 2 |
| 24 | 10 | 5 | 3 | 2 | 1 |

**Kind of Grease** — Many ordinary cup greases will disintegrate at speeds far below those at which DODGE bearings will operate successfully if proper grease is used. DODGE bearings have been lubricated at the factory with No. 2 consistency lithium-base grease which is suitable for normal operating conditions. Relubricate with lithium-base grease or a grease which is compatible with original lubricant and suitable for roller bearing service. In unusual or doubtful cases the recommendation of a reputable grease manufacturer should be secured.

**Special Operating Conditions** — Refer acid, chemical, extreme or other special operating conditions to DODGE/Reliance Electric Industrial Company, Greenville, S.C.

**WARNING:** Because of the possible danger to persons(s) or property from accidents which may result from the improper use of products, it is important that correct procedures be followed. Products must be used in accordance with the engineering information specified in the catalog. Proper installation, maintenance and operation procedures must be observed. The instructions in the instruction manuals must be followed. Inspections should be made as necessary to assure safe operation under prevailing conditions. Proper guards and other suitable safety devices or procedures as may be desirable or as may be specified in safety codes should be provided, and are neither provided by Rockwell Automation nor are the responsibility of Rockwell Automation. This unit and its associated equipment must be installed, adjusted and maintained by qualified personnel who are familiar with the construction and operation of all equipment in the system and the potential hazards involved. When risk to persons or property may be involved, a holding device must be an integral part of the driven equipment beyond the speed reducer output shaft.

DODGE / P.O. Box 499 / 6040 Ponders Court / Greenville, S.C. 29602-0499 / 864-297-4800

© Rockwell International Corporation, 1997
DODGE is a registered trademark of Rockwell Automotion.

Rockwell Automation Dodge

Printed in U.S.A. Instruction Manual 499792 1097 10M-K

Confidential Treatment Requested by Transocean Holdings LLC TRN-HCEC-00002120

CONFIDENTIAL TRN-MDL-00043857

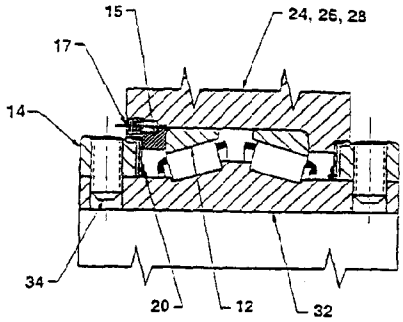


3 3/16" to 5" Type E Bearings
(Except 3 3/16" to 3 1/2" Piloted Flange Bearings)

NOTE: The two-digit numbers are for reference only. Order parts by the six-digit numbers in the Parts List. Each six-digit number is a complete identification of the part or assembly.

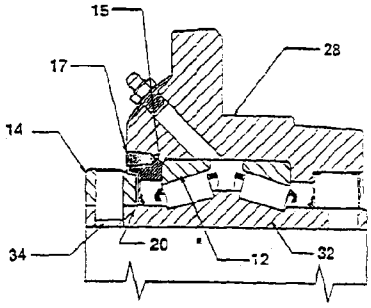


3 3/16" to 3 1/2" Piloted Flange Bearings Only

## Parts for 3 3/16" to 5" Type E Bearing

| Reference | Name of Part | Required for One Assembly: 2-Bolt Pillow Block | 4-Bolt Pillow Block | Flange Bearing | Piloted Flange Bearing | Take-Up Bearing | Part Number for Various Shaft Sizes: 3 3/16, 3 3/4, 3 7/16, 3 1/2 | 3 15/16, 4 | 4 7/16, 4 1/2 | 4 13/16, 5 |
|---|---|---|---|---|---|---|---|---|---|---|
| 12 | Cup | 2 | 2 | 2 | 2 | | 403016 | 390779 | 390782 | 390785 |
| 14 | Drive Collar (65° S.S. Angle) | 2 | 2 | 2 | * | | 060945 | 060946 | 060947 | 040059 |
| 15 | Adjustment Nut | 1 | 1 | 1 | 1 | | 060490 | 060491 | 060492 | 060493 |
| 17 | Adj. Nut Lockscrew | 1 | 1 | 1 | 1 | | 400530 | 400530 | 400530 | 400530 |
| 20 | Seal, Single Lip | 2 | 2 | 2 | 2 | | 061362 | 061363 | 061364 | 061365 |
| 24 | 2-Bolt Gray Iron Pillow Block Housing | 1 | 0 | 0 | 0 | | 060407 | .... | .... | .... |
| | 4-Bolt Gray Iron Pillow Block Housing | 0 | 1 | 0 | 0 | | 060413 | 060408 | 060409 | 060410 |
| | Top Angle Housing * | 0 | 0 | 0 | 0 | 1 | 122269 | 012270 | .... | .... |
| | Steel Pillow Block Housing | 1 | 1 | 0 | 0 | | 060059† | 060060‡ | 060061‡ | 060062‡ |
| 26 | Flange Housing | 0 | 0 | 1 | 0 | | 059107 | 059108 | .... | .... |
| 28 | Piloted Flange Housing | 0 | 0 | 0 | 1 | | 059176 | 059177 | 059178 | 059179 |
| ↓ | Lubrication Fitting | 1 | 1 | 1 | 1 | | 405015 | 405015 | 405015 | 405015 |

| Reference | Name of Part | Part Number for Various Shaft Sizes: 3 3/16 | 3 1/4 | 3 7/16 | 3 1/2 | 3 15/16 | 4 | 4 7/16 | 4 1/2 | 4 13/16 | 5 |
|---|---|---|---|---|---|---|---|---|---|---|---|
| 32 | Cone ▼ (65° S.S. Angle) | 389801 | 389802 | 389803 | 389804 | 389805 | 389806 | 389807 | 389808 | 389809 | 389810 |
| 34 | Drive Collar Screw ■ | 400154 | 400154 | 400154 | 400154 | 400186 | 400186 | 400186 | 400186 | 400190 | 400190 |

↓ Not shown on drawing.
▼ One required.
■ Two required per collar.
† Two Bolt Base.
‡ 4 Bolt Base.
* One required for 3 3/16 to 3 1/2; 2 required for larger sizes.
* Uses 405016 Lubrication Fitting.

Shaft Tolerances: 3 3/16" to 4" +.0000 −.0010
4 3/16" to 5" +.0000 −.0015

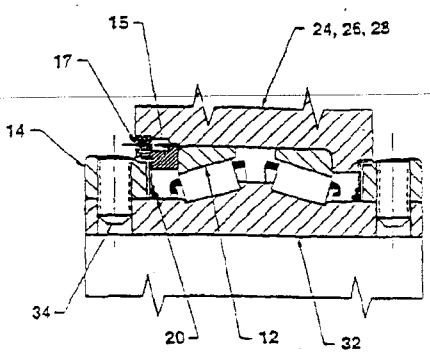


80mm to 125mm Type E Bearing

NOTE: The two-digit numbers are for reference only. Order parts by the six-digit numbers in the Parts List. Each six-digit number is a complete identification of the part or assembly.

## Parts for 80mm To 125mm Type E Pillow Block Bearings

| Item | 24 | | 32 | 12 | 14 | 15 | 20 | 34 | 17 | + |
|---|---|---|---|---|---|---|---|---|---|---|
| Shaft Size | 2-Bolt Housing | 4-Bolt Housing | Cone * | Cup | Collar * | Adjusting Nut | Seal | Setscrew | Adj. Nut Lock Screw | Lube Fitting |
| 80 MM | 061325 | — | 389749 | 403016 | 061049 | 060490 | 061362 | 400714 | 400530 | 405601 |
| 85 MM | 061325 | — | 389750 | 403016 | 061049 | 060490 | 061362 | 400710 | 400530 | 405601 |
| 90 MM | 061325 | — | 389751 | 403016 | 061049 | 060490 | 061362 | 400710 | 400530 | 405601 |
| 100 MM | — | 061327 | 389752 | 390779 | 061050 | 060491 | 061363 | 400711 | 400530 | 405601 |
| 110 MM | — | 061328 | 389753 | 390782 | 061051 | 060492 | 061364 | 400711 | 400530 | 405601 |
| 115 MM | — | 061328 | 389754 | 390782 | 061051 | 060492 | 061364 | 400711 | 400530 | 405601 |
| 125 MM | — | 061329 | 389755 | 390785 | 061052 | 060493 | 061365 | 400712 | 400530 | 405601 |
| Quantity Per | 1 | 1 | 1 | 2 | 2 | 1 | 2 | 4 | 1 | 1 |

* 55° Setscrew Angle
+ Not Shown On Drawing

## APPENDIX 3

*Hot Line Hose Reel*
COMPONENT DESCRIPTION

*Reference Item No.:* 2*

*Quantity Required:* 1 per reel

*Description:* Planetary Reducer/Disc Brake

*Manufacturer:* Brevini USA, Inc.

*Part Number:* RAF50/3/180/FL250/RM310

*Source:* Houston, Texas

Hydradyne Hydraulics
1019 Rankin Road
Houston, Texas 77073

Telephone: 281-821-6900
Telefax: 281-821-5939

Manufacturer

Brevini USA, Inc.
400 Corporate Woods Pkwy.
Vernon Hills, Illinois 60061

Telephone: 888-273-8464
Telefax: 847-478-1001



Confidential Treatment Requested by Transocean Holdings LLC TRN-HCEC-00002124

CONFIDENTIAL TRN-MDL-00043861

KG X 2.2046 = #

NEWTONS X .2248 = # FORCE

NEWTON METER X 8.83 = IN-LBS

X .7358 = FT-LBS

FILIALI EXTRAEUROPEE
SUBSIDIARY COMPANIES
OUTSIDE EUROPE

**brevini usa**

BREVINI USA INC.
1008 W. Raven Ave., P.O. Box 6051
YOUNGSTOWN, Ohio 44501 - U.S.A.
Tel.: (330) 7473569
Fax.:(330) 7470203

**brevini canada**

H.T.S. BREVINI CANADA LTD.
236 Galaxy Blvd.
REXDALE, Ontario, CANADA
M9W 5RS
Tel.:(416) 6742591
Fax.:(416) 6741478

**brevini australia**

BREVINI AUSTRALIA PTY. LTD.
N° 9 Prince William Drive
P.O. Box 685
SEVEN HILLS NSW 2147
AUSTRALIA
Tel.:(2) 8389475
Fax.:(2) 6743886

**brevini new zealand**

BREVINI NEW ZEALAND LTD.
Spring Energy Centre
Unit 9B Kerwyn Avenue
East Tamaki, AUCKLAND
NEW ZEALAND
Tel.:(9) 2745050
Fax.:(9) 2745055

**brevini china**

BREVINI CHINA SHANGHAI OFFICE
505 Wulumuqi Road N.-200040
SHANGHAI - CHINA
c/o Shanghai Hotel-Room 6003
Tel.:(21) 62481261 (diretti)/62480088
Fax.:(21) 62481261
"bresh@public.sta.net.cn"

**brevini korea**

BREVINI KOREA LTD.
Yang Chon Bldg 4F 330-11,
SHIN JUNG-DONG
YANG CHON-KU, SEOUL - KOREA
Tel.:(2)652-0782
Fax.:(2)652-0786

FILIALI EUROPEE
SUBSIDIARY COMPANIES IN EUROPE

**brevini belgio**

BREVINI BELGIO S.A.
42-43, Rue du Parc
B-5000 NAMUR - BELGIQUE
Tel.:(81) 229194
Fax.:(81) 230862

**brevini danmark**

BREVINI DANMARK A/S
Vaevergangen 30
DK-2670 KARLSLUNDE-DENMARK
Tel.:4615-4500
Fax.:4615-4915

**brevini españa**

BREVINI ESPAÑA S.A.
Pol. Ind. "Los Huertecillos", C/Abedul, s/n
28350-CIEMPOZUELOS (MADRID)
ESPAÑA
Tel.:(1) 8015165
Fax.:(1) 8015170

**brevini france**

BREVINI FRANCE S.A.
30-32 Rue du Morvan,
B.P. SILIC 467
94613 RUNGIS CEDEX-FRANCE
Tel.:(1) 41801494
Fax.:(1) 46875372

**brevini getriebe**

BREVINI GETRIEBE GmbH
Stefansbecke 23
45549 SPROCKHÖVEL-DEUTSCHLAND
Tel.:(2339) 9204-0
Fax:(2339) 9204-44

**brevini ireland**

BREVINI IRELAND LTD.
Unit F1, Clane Business Park, Kilcok Rd.,
CLANE, COUNTRY KILDARE,
IRELAND
Tel.:(45) 868555
Fax.:(45) 868021

**brevini nederland**

BREVINI NEDERLAND B.V.
Röntgenweg 24 - BP 429
2408 AB ALPHEN AAN DEN RIJN
HOLLAND
Tel.:(172) 476464
Fax.:(172) 425388

**brevini norge**

BREVINI NORGE A.S.
Lokka 6 - P.O.BOX 2071
3255 LARVIK - NORWAY
Tel.:3311-7100
Fax.:3311-7011

**brevini svenska**

BREVINI SVENSKA AB.
Hammargatan 67 - Postbox 728
60116 NORRKOEPING - SWEDEN
Tel.:(11) 239901
Fax :(11) 239919

**brevini U.K.**

BREVINI U.K. LTD.
Planet House, Centre Park,
WARRINGTON,
Cheshire WA1 1QX - ENGLAND
Tel.: (1925) 636682
Fax.: (1925) 658872

LICENZIATARIE
LICENCEES

MAKISHINKO CO. LTD.
3-4-206, Tanimachi 7-Chome
Chuo-Ku, OSAKA 542 - JAPAN
Tel.:(6)-768-5671
Fax.:(6)-763-2100

TRACTOR ENGINEERS LTD.
Saki Vihar Road - P.O. Box 8913
SAKI NAKA, BOMBAY 400072 - INDIA
Tel.:(22) 8521401
Fax.:(22) 8524175
Tlx.:0081-1171494

DISTRIBUTORI ESCLUSIVI
SOLE DISTRIBUTORS

Algeria, Argentina, Austria, Colombia, Cyprus, Croazia, Czecho-Slovakia, Egypt, Finland, Greece, Hong Kong, Hungary, India, Iran, Irac, Israel, Japan, Lebanon, Libya, Malaysia, Mexico, Morocco, Oman, Portugal, Saudi Arabia, Singapore, Slovenia, South Africa, Syria, Switzerland, Thailand, Taiwan, Tunisia, Turkey, U.A.E.

Confidential Treatment Requested by Transocean Holdings LLC TRN-HCEC-00002125

CONFIDENTIAL TRN-MDL-00043862

# Riduttori per argano serie RAF

Vien proposto in questa gamma il solo riduttore epicicloidale in un'apposita versione a cassa rotante, predisposta per l'inserimento in tamburi per avvolgimento fune. Il RAF è dotato di flangia di fissaggio adatta alle installazioni sulle strutture portanti per argani; in ingresso porta normalmente il freno lamellare negativo ad apertura idraulica, che a richiesta può essere equipaggiato con ruota libera per l'antiritorno.
I riduttori RAF possono essere realizzati con 2 o 3 stadi di riduzione, con sistema di flangiatura universale Brevini per i motori di azionamento da montare in entrata.
Tamburo e struttura possono quindi essere di qualsivoglia configurazione dimensionale non avendo altra imposizione che i centraggi di accoppiamento per il fissaggio del RAF.
Si vuole consentire in questo modo al cliente che ha esigenze applicative speciali, di poter ugualmente disporre di un prodotto standard che costituisca il sistema cinematico attorno al quale costruire l'argano con le particolarità o le personalizzazioni desiderate.
Il RAF è concepito con un solo cuscinetto in considerazione dell'impiego al quale esso è destinato; il Cliente deve pertanto prevedere, sulla struttura di appoggio, il secondo cuscinetto portante.
Le prestazioni qui indicate sono calcolate sec. le norme FEM - 3ª edizione 1987 - classificazione $T_3$ L2 (M3) con velocità di uscita 20 min.$^{-1}$ (durata totale 1600 ore). In caso di velocità diversa, tenere conto che un raddoppio della stessa velocità, a parità di classificazione, comporta una riduzione della coppia in uscita al 90% di quanto indicato.
La classificazione $M_3$ è quella normalmente pertinente al sollevamento in gru di montaggio, gru galleggianti, derricks, gru ferroviarie e gru mobili in genere.

# Winch drive gears RAF series

In this range only the planetary reduction gear unit, with rotating outer casing, is supplied; it is designed to be fitted into the drum, for space saving; on the input side, usually it is equipped with a multidisc fail safe brake, hydraulically released (on request it can incorporate also a mechanical back stop). RAF gear units can be supplied with 2 and 3 reduction stages. The driving motors are fitted on the input side by means of the Brevini universal flange system.
Thus the designer has the advantage of using a standard transmission product, whilst having the freedom to design the rope drum and frame to fit within his own space envelope and to incorporate any special features required.
RAF units have only one internal bearing on the output side which supports one end of the rope drum. It is therefore essential to include a second bearing in the supporting structure to support the other end of the drum.
The given performances are calculated according to FEM standard 1987 issue, classification $T_3$ L2 (M3) with output speed of 20 min.$^{-1}$ (total life 1600 hours). In case of different value of the output speed, take into account that doubling the given speed, for the same classification, requires that the output torque is reduced to 90% of the figure given.
Classification $M_3$ is applicable to lifting drive of mobile cranes, mounting crane, floating and railway cranes, derricks.

Confidential Treatment Requested by Transocean Holdings LLC TRN-HCEC-00002126

CONFIDENTIAL TRN-MDL-00043863

# RAF50

## Riduttori per argano
## Winch drive gears

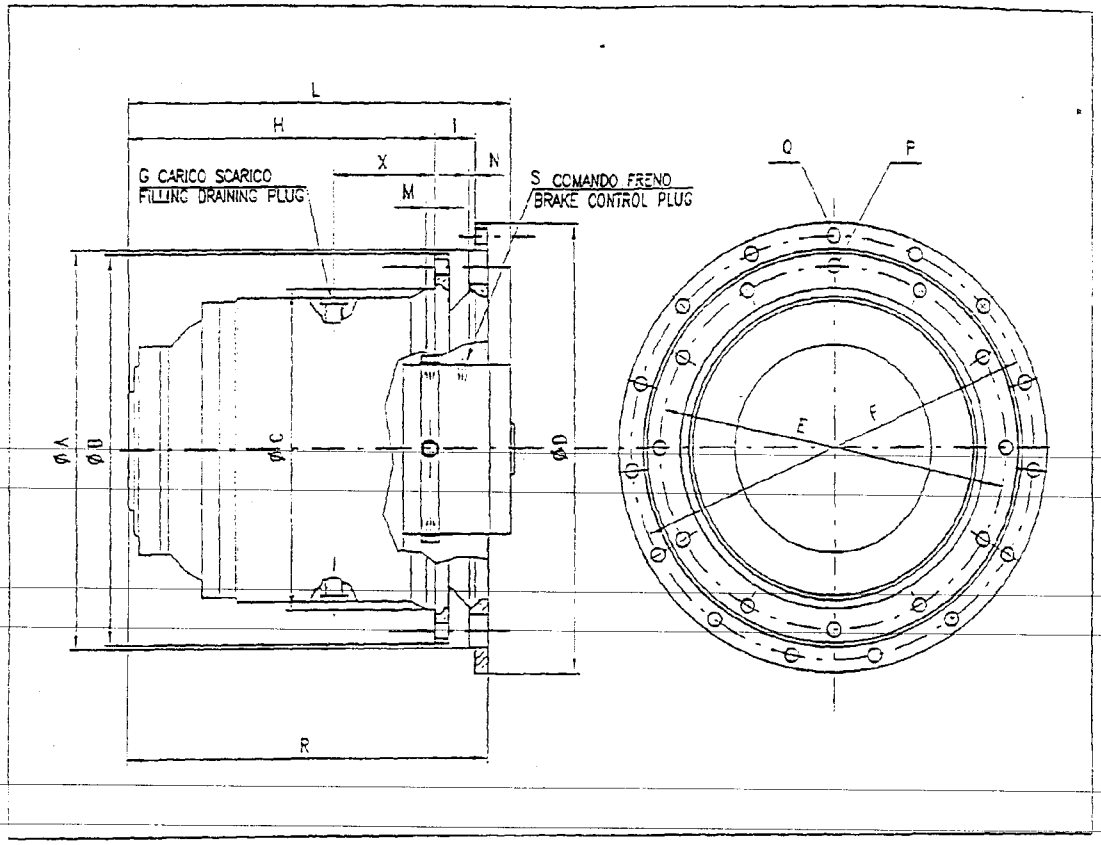


DATI TECNICI/TECHNICAL DATA

| TIPO TYPE | TIRO max (kN) LINE PULL (kN) | T1max (Nm) | i | T2Fem (Nm) | i | T2Fem (Nm) | i | T2Fem (Nm) | kg. | l. |
|---|---|---|---|---|---|---|---|---|---|---|
| | | | 12.5 | 9000 | 20 | 13000 | 35.5 | 12000 | | |
| RAF 50/2 | 60 | 750 | 16 | 10500 | 25 | 13000 | | | 200 | 4 |
| | | | 18 | 12000 | 31.5 | 13500 | | | | |
| | | | 45 | 13500 | 90 | 13500 | | | | |
| | | | 56 | 13500 | 100 | 13500 | | | | |
| RAF 50/3 | 60 | 500 | 63 | 13500 | 112 | 13500 | | | 210 | 4.5 |
| | | | 71 | 13500 | 140 | 13500 | | | | |
| | | | 80 | 13500 | | | | | | |

FRENI/BRAKES

| TIPO/TYPE | | FL 350 | FL 350RL | FL 450 | FL 450RL | FL 750 | FL750RL | FL 760 | FL 760 RL | FL 960 | FL 960RL | SF |
|---|---|---|---|---|---|---|---|---|---|---|---|---|
| RAF 50/2 | L | 440 | 466 | 440 | 466 | 453 | 479 | | | | | 383.5 |
| RAF 50/3 | L | 501 | 527 | 501 | 527 | 514 | 540 | | | | | 444.5 |

DATI DIMENSIONALI/DIMENSIONS

| TIPO/TYPE | A | B | C | D | E | F | G | H | I | X | M | N | P | Q | R | S |
|---|---|---|---|---|---|---|---|---|---|---|---|---|---|---|---|---|
| RAF 50/2 | 460h7 | 450 | 370h7 | 520h8 | 420 | 490 | 1/2G N.2x180° | 365 | 47.5 | 117 | 10 | 7 | N.12x30° D17 | N.15x2° D17 | 427.5 | M12x1.5 |
| RAF 50/3 | 460h7 | 450 | 370h7 | 520h8 | 420 | 490 | 1/2G N.2x180° | 426 | 47.5 | 117 | 10 | 7 | N.12x30° D17 | N.15x2° D17 | 488.5 | M12x1.5 |

Confidential Treatment Requested by Transocean Holdings LLC TRN-HCEC-00002127

CONFIDENTIAL TRN-MDL-00043864

# Entrata universale — Universal input

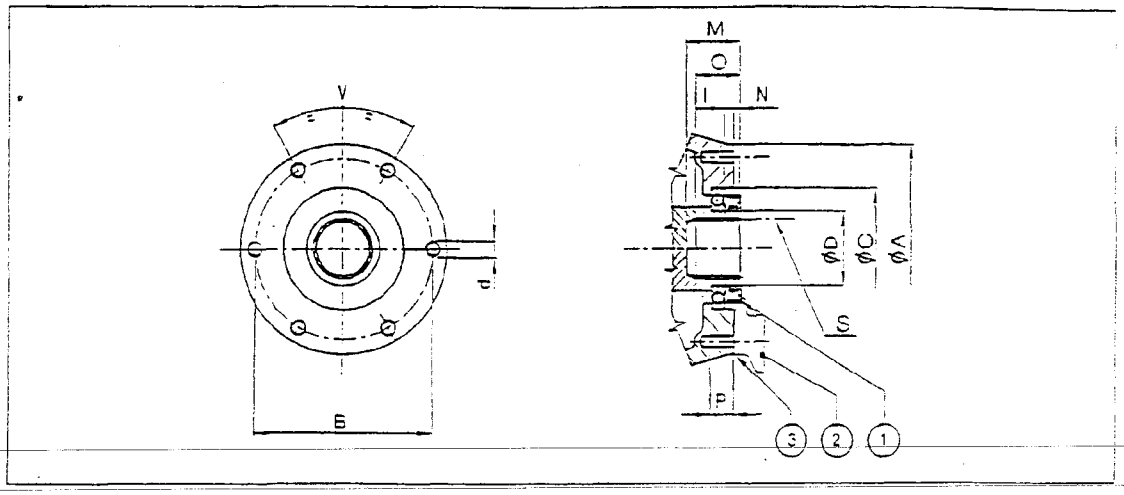


| A | B | C | D | I | M | N | O | P | d | S | V |
|---|---|---|---|---|---|---|---|---|---|---|---|
| 165 | 145 | 95f7 | 60f7 | 9 | 46 | 4 | 38 | 22 | M12 | A50x45 DIN 5482 | 6x60° |

1. TENUTA OLIO / OIL SEAL BA 60-85-10 DIN 3760
2. FLANGIA MOTORE / MOTOR FLANGE BA 65-85-10 DIN 3760 PER / FOR EC2150/EC2250/EC3600/EC3800
3. GUARNIZIONE / GASKET Cod. BREVINI 366/022.4/9000

# Freni lamellari per entrata universale — Brakes for universal input

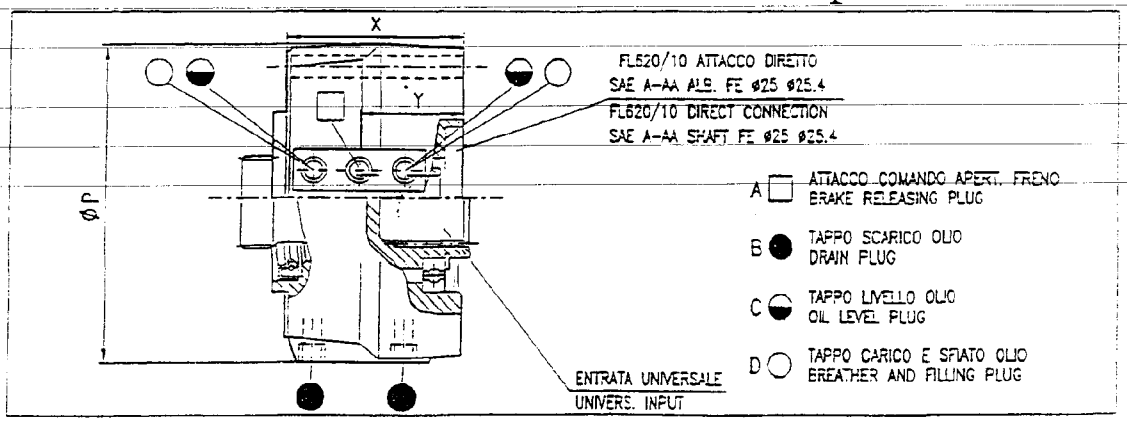


| TIPO TYPE | Tmax DINAMICA DYNAMIC 1200 min⁻¹ (Nm) | Tmax STATICA STATIC (Nm) | PRESSIONI PRESSURE APERTURA OPENING (bar) | PRESSIONI PRESSURE MAX (bar) | PESO WEIGHT (kg) | VOLUMI OLIO OIL VOLUME H (lt) | VOLUMI OLIO OIL VOLUME V (lt) | ATTACCHI PLUGS A | ATTACCHI PLUGS B | ATTACCHI PLUGS C | VOL. OLIO PER COMANDO APERT. FRENO OIL VOLUME FOR BRAKE RELEASE cm³ LAMELLE NUOVE NEW DISCS | VOL. OLIO PER COMANDO APERT. FRENO OIL VOLUME FOR BRAKE RELEASE cm³ LAMELLE USATE WORN OUT DISCS | ØP | Y | X |
|---|---|---|---|---|---|---|---|---|---|---|---|---|---|---|---|
| FL 620/U | 160÷190 | 280 | 21÷26 | 210 | 8 | 0.1 | 0.2 | M10x1 | R 1/8" | R 1/8" | 10 | 20 | 131 | 46 | 104.5 |
| FL 635/U | 210÷250 | 380 | 12÷15 | 315 | 9 | 0.1 | 0.2 | M12x1.5 | R 1/4" | R 1/4" | 10 | 20 | 165 | 59 | 9[illegible] |

# Freni in entrata

# Input brakes

I riduttori di questo catalogo possono essere dotati in entrata di:
- freni a dischi multipli negativi ad apertura idraulica;
- freni a disco positivi a comando idraulico o meccanico;
- freno a tamburo meccanico, positivo.

Gli ultimi due tipi normalmente su riduttori coassiali.

## Freni negativi

Questi freni agiscono sotto la spinta di una serie di molle su coppie di dischi alternati fissi e mobili; lo sbloccaggio avviene per effetto della pressione idraulica nel pistone. Hanno quindi un funzionamento "negativo"; sono da impiegare come freni di stazionamento o di sicurezza, non per frenatura dinamica (funzione che deve essere svolta dal sistema idraulico). Nonostante questo, nella tabella viene riportata, oltre alla coppia statica, anche quella dinamica calcolata a 1200 min.$^{-1}$, per consentire, ove richiesto, una più attenta valutazione delle condizioni di sicurezza.

Tali prestazioni, con margine di sicurezza +/- 10%, sono sempre calcolate con contropressione/pressione min. apertura.

Per la selezione, occorre tenere conto di due condizioni:

1) coppia freno · $i_{eff.}$ > coppia richiesta in uscita;
2) coppia freno · $i_{eff.}$ ≤ 1,1 · $T_{max}$

($T_{max}$ da page A.16)

Ricordiamo che alte velocità di rotazione, oppure prolungati funzionamenti con asse verticale, possono generare elevati aumenti di temperatura: in questi casi, come pure in presenza di elevati carichi inerziali da frenare, contattare il servizio tecnico commerciale BREVINI per opportuni consigli in merito.

Per la lubrificazione, si consigliamo oli minerali resistenti al calore ed all'invecchiamento, di viscosità ISO VG 32, indice di viscosità pari o superiore a 95. Gli oli idraulici sono generalmente idonei.

## Freni positivi

I freni a disco hanno comando idraulico o meccanico; le prestazioni sono riportate nella tabella che segue, che comprende anche quelle del freno a ceppi, a comando puramente meccanico. Ricordiamo che sullo stesso disco possono essere montate una pinza idraulica ed una a comando meccanico, azionata a mezzo di cavo in acciaio (escluso dalla nostra fornitura). Con opportuna soluzione di comando, tale pinza può essere resa di tipo "negativo". Richiamiamo l'attenzione sull'uso di olio per freni (SAE 70 R3) in caso di pinza idraulica.

The gear units in this catalogue can be supplied with the following brakes mounted on the input:
- hydraulically released negative multidisc brakes;
- hydraulically or mechanically operated positive caliper brakes;
- positive mechanical drum brakes.

The last two types are normally fitted on in-line gear units.

## Negative brakes

These brakes are held on by a series of coil springs pressing together alternative fixed and rotating plates. This means they work as a "negative" brake and are intended for parking or emergency stopping only. Normal stopping of the machine should be done by the hydraulic system. Despite this, the table also indicates a dynamic torque, calculated at a speed of 1200 min.$^{-1}$, to allow an evaluation of the safety margins involved, where necessary. These performances, with +/- 10% accuracy margins, are always calculated without back pressure; otherwise the braking torque is reduced as a percentage of the ratio back pressure/minimum opening pressure. In carrying out the selection, the following two conditions must be taken into account:

1) braking torque · $i_{eff.}$ > required output torque;
2) braking torque · $i_{eff.}$ ≤ 1,1 · $T_{max}$

($T_{max}$ as per page A.16)

We remind you that high rotation speeds, or extended running with vertical axis, can generate considerable temperature increases; in such cases, or when braking of high inertial loads is required, please apply to BREVINI technical staff for advice. For lubrication we recommend to use minerals oils, heat and aging resistant, having viscosity ISO VG 32 and viscosity index at least 95; hydraulic oils are usually suitable.

## Positive brakes

Caliper brakes are hydraulically or mechanically operated and their performances are stated in the following table, including also shoe brake performances.

Remember that on the same disc you can mount both hydraulically and mechanically operated caliper. The latter is actuated by means of a steel cable, which is not included in our scope of supply. With a suitable installation arrangement, this caliper can be transformed to negative operation type. In case of hydraulic calipers we draw your attention to the use of brake fluid (SAE 70 R3).

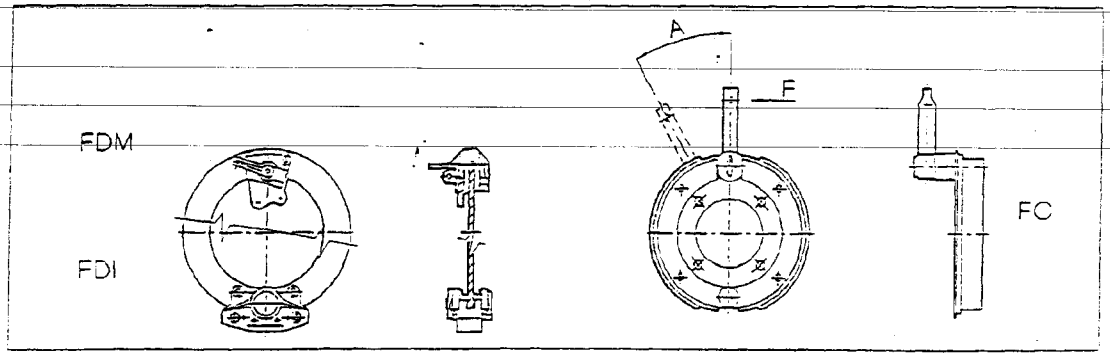


| TIPO TYPE | Tmax DINAMICA DYNAMIC (Nm) | Tmax STATICA STATIC (Nm) | Pmax (bar) | Fmax (N) | n1max (min$^{-1}$) | A | OLIO OIL | PESO WEIGHT (kg) |
|---|---|---|---|---|---|---|---|---|
| FDI | 700 | 900 | 100 | | 2000 | | SAE 70 R 3 | 4 |
| FDM | 460 | 600 | | 840 | 2000 | | | 5 |
| FC | 400 | 500 | | 640 | 2000 | 5°÷35° | | 2 |

Confidential Treatment Requested by Transocean Holdings LLC TRN-HCEC-00002129

CONFIDENTIAL TRN-MDL-00043866

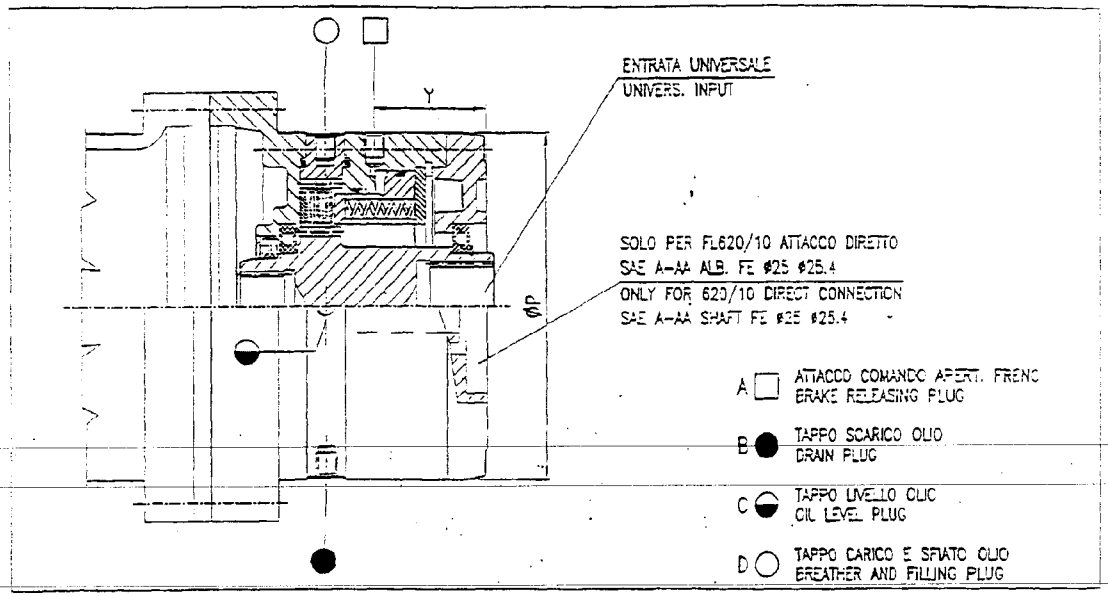


| TIPO TYPE | Tmax DINAMICA DYNAMIC 1200 min⁻¹ (Nm) | Tmax STATICA STATIC (Nm) | PRESSIONI PRESSURE APERTURA OPENING (bar) | MAX (bar) | PESO WEIGHT (kg) | VOLUMI OLIO OIL VOLUME H (lt) | V (lt) | ATTACCHI PLUGS A | B | C | D | VOL. OLIO PER COMANDO APERT. FRENO OIL VOLUME FOR BRAKE RELEASE cm³ LAMELLE NUOVE NEW DISCS | LAMELLE USATE WORN OUT DISCS |
|---|---|---|---|---|---|---|---|---|---|---|---|---|---|
| FL 620/10 | 160÷190 | 220 | 21÷26 | 210 | 7,8 | 0.1 | 0.2 | M10x1 | R 1/8" | R 1/8" | R 1/8" | 10 | 20 |
| FL 635/10 | 210÷250 | 380 | 12÷15 | 315 | 10 | 0,1 | 0.2 | M12x15 | R 1/4" | R 1/4" | R 1/4" | 10 | 20 |
| FL 250 | 140÷170 | 250 | 12÷15 | 315 | 24 | 0,3 | 0.6 | M12x15 | R 1/4" | R 1/4" | R 1/4" | 15 | 30 |
| FL 350 | 210÷260 | 400 | 18÷22 | 315 | 24 | 0.3 | 0.6 | M12x15 | R 1/4" | R 1/4" | R 1/4" | 15 | 30 |
| FL 450 | 410÷500 | 740 | 22÷28 | 315 | 26 | 0.3 | 0.6 | M12x15 | R 1/4" | R 1/4" | R 1/4" | 15 | 30 |
| FL 750 | 670÷820 | 1250 | 22÷28 | 315 | 28,5 | 0,5 | 1 | M12x15 | R 1/4" | R 1/4" | R 1/4" | 15 | 30 |
| FL 760 | 950÷1150 | 1750 | 19÷25 | 315 | 37 | 1 | 2 | M12x15 | R 1/4" | R 1/4" | R 1/4" | 22 | 45 |
| FL 960 | 1200÷1450 | 2250 | 19÷25 | 315 | 42 | 1.2 | 2.4 | M12x15 | R 1/4" | R 1/4" | R 1/4" | 22 | 45 |

| TIPO TYPE | P (mm) | Y (mm) |
|---|---|---|
| FL 620/10 | 131 | 46 |
| FL 635/10 | 165 | 54,5 |
| FL 250 | 195 | 67 |
| FL 350 | 195 | 67 |
| FL 450 | 195 | 67 |
| FL 750 | 195 | 67 |
| FL 760 | 225 | 72,5 |
| FL 960 | 225 | 72,5 |

Confidential Treatment Requested by Transocean Holdings LLC TRN-HCEC-00002130

CONFIDENTIAL TRN-MDL-00043867

# INPUT BRAKES

The gear reducers in this catalog can be supplied with the following brakes mounted on the input:
- Hydraulically released static multidisc brakes;
- Hydraulically or mechanically operated static caliper brake;
- Static mechanical drum brakes.

The last two types are normally mounted on in-line gear reducers.

## NEGATIVE BRAKES (Normally On)

The braking power of these units is achieved by high pressure springs pressing on alternate fixed and rotating discs. The brakes are active until released by hydraulic pressure. They are intended for parking or emergency stopping only. Normal stopping of the machine should be done by the hydraulic system. Despite the nature of these brakes, the table shows a dynamic torque, calculated at a speed of 1200 RPM, to allow an evaluation of the safety margins involved, where necessary. These performances, with +/—10% accuracy margins, are always calculated without back pressure. Otherwise the braking torque is reduced as a percentage of the ratio back pressure/minimum opening pressure.

In carrying out the selection, the following two conditions mus be taken into consideration:

1) Braking torque · ieff > required output torque;
2) Braking torque · ieff ≤ 1.1 · $T_{2max}$ (per page 6 ).

Remember that high rotation speeds, or extended running in a vertical position, can generate considerable temperature increases. In such cases, or when braking high inertial loads, please contact the BREVINI technical staff for assistance.

For lubrication we recommend mineral oils that are heat and aging resistant, having viscosity ISO VG32 and viscosity index of at least 95; hydraulic oils are usually suitable.

## POSITIVE BRAKES (Normally Off)

Caliper brakes are hydraulically or mechanically operated and their performances are stated in the following table, including also shoe brake performances.

You can mount both hydraulically and mechanically operated calipers on the same disc. The latter is actuated by means of a steel cable, which is not provided by BREVINI. With a suitable installation arrangement, this caliper can be changed to work in negative mode. For hydraulic calipers we recommend the use of brake fluid (SAE 70 R3).

TO CONVERT

| FROM | FACTOR | TO |
|---|---|---|
| 1 mm | ×.039 | =inch |
| 1 Nm | ×.738 | =ft.-lb |
| 1 kNm | ×738 | =ft.-lb. |
| 1 kN | ×225 | =lbf. |
| 1 kg | ×2.205 | =lb. |
| 1 liter | ×.264 | =U.S.Gal. |
| 1 bar | ×14.504 | =PSI |
| 1 km/h | ×0.621 | =mph |

1 g=9.807 m/s²=32.174 ft/s²

# ISO TOLERANCE LIMITS

(Clearance in μm)

1 μm=.001 mm

| Tolerance Zone | Allowance | Nominal dimensions in mm (shafts) over 18 up to 30 | over 30/40 up to 40/50 | over 50 up to 80 | over 80 up to 120 | over 120 up to 180 | over 180 up to 250 | over 250 up to 315 | over 315 up to 400 | over 400 up to 500 | over 500 up to 630 |
|---|---|---|---|---|---|---|---|---|---|---|---|
| f 7 | upper | — 20 | — 25 | — 30 | — 31 | — 43 | — 50 | — 56 | — 62 | — 68 | — 76 |
| | lower | — 41 | — 50 | — 60 | — 71 | — 83 | — 96 | —108 | —119 | —131 | —146 |
| h 7 | upper | 0 | 0 | 0 | 0 | 0 | 0 | 0 | 0 | 0 | 0 |
| | lower | — 21 | — 25 | — 30 | — 35 | — 40 | — 46 | — 52 | — 57 | — 63 | — 70 |
| h 8 | upper | 0 | 0 | 0 | 0 | 0 | 0 | 0 | 0 | 0 | 0 |
| | lower | — 33 | — 39 | — 46 | — 54 | — 63 | — 72 | — 81 | — 89 | — 97 | —110 |
| h 11 | upper | 0 | 0 | 0 | 0 | 0 | 0 | 0 | 0 | 0 | 0 |
| | lower | —130 | —160 | —190 | —220 | —250 | —290 | —320 | —360 | —400 | —440 |
| k 6 | upper | + 15 | + 18 | + 21 | + 25 | + 28 | + 33 | + 36 | + 40 | + 45 | + 44 |
| | lower | + 2 | + 2 | + 2 | + 3 | + 3 | + 4 | + 4 | + 4 | + 5 | 0 |
| m 6 | upper | + 21 | + 25 | + 30 | + 35 | + 40 | + 46 | + 52 | + 57 | + 63 | + 70 |
| | lower | + 8 | + 9 | + 11 | + 13 | + 15 | + 17 | + 20 | + 21 | + 23 | + 25 |

| Tolerance Zone | Allowance | Nominal dimensions in mm (shafts) over 18 up to 30 | over 30/40 up to 40/50 | over 50 up to 80 | over 80 up to 120 | over 120 up to 180 | over 180 up to 250 | over 250 up to 315 | over 315 up to 400 | over 400 up to 500 | over 500 up to 630 |
|---|---|---|---|---|---|---|---|---|---|---|---|
| H 7 | upper | + 21 | + 25 | + 30 | + 35 | + 40 | + 46 | + 52 | + 57 | + 63 | + 70 |
| | lower | 0 | 0 | 0 | 0 | 0 | 0 | 0 | 0 | 0 | 0 |
| M 7 | upper | 0 | 0 | 0 | 0 | 0 | 0 | 0 | 0 | 0 | — 26 |
| | lower | — 21 | — 25 | — 30 | — 35 | — 40 | — 46 | — 52 | — 57 | — 63 | — 96 |

Confidential Treatment Requested by Transocean Holdings LLC TRN-HCEC-00002131

CONFIDENTIAL TRN-MDL-00043868

| brevini usa | DESCRIPTION: PLANETARY GEAR REDUCER<br>TYPE: RAF50/I/3/FL250<br>VERSION: | DRAWING NO.<br>06/5560 |
|---|---|---|

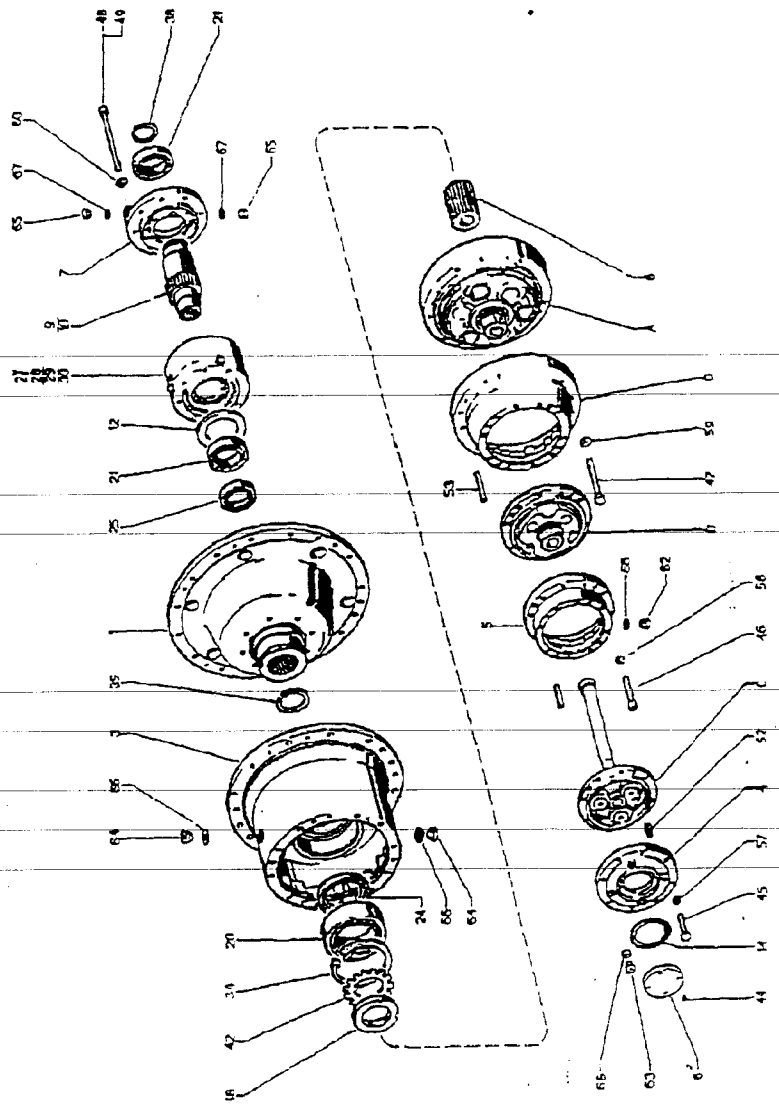

*Brevini USA, Inc.* 400 Corporate Woods Pkwy. Vernon Hills, IL 60061

Confidential Treatment Requested by Transocean Holdings LLC TRN-HCEC-00002132

CONFIDENTIAL TRN-MDL-00043869

| brevini usa | DESCRIPTION: RAF50/I/3/FL250<br>TYPE:<br>VERSION: | DRAWING NO.<br>06/5560 |
|---|---|---|

| ITEM | PART NUMBER | DESCRIPTION | QTY. | REMARKS |
|---|---|---|---|---|
| A | 08/4177 | EM1150 REDUCTION STAGE | 1 | |
| B | 00/4108 | EM1065 REDUCTION STAGE | 1 | |
| C | 09/4044 | EM1020 REDUCTION STAGE | 1 | |
| D | 00/3022 | 150 TO 065 INT. FLANGE | 1 | |
| 1 | 381-0821-4200 | SPINDLE | 1 | |
| 3 | 347-1121-4200 | FLANGE | 1 | |
| 4 | 353-0372-4000 | COVER | 1 | |
| 5 | 342-0362-4000 | INTERMEDIATE FLANGE | 1 | |
| 6 | 353-0074-6100 | COVER | 1 | |
| 7 | 346-0082-4000 | INPUT FLANGE | 1 | |
| 8 | 391-2614-0300 | COUPLING | 1 | |
| 9 | 317-0473-0100 | SHAFT | 1 | |
| 12 | 362-0124-6300 | SHIM | 1 | |
| 14 | 366-0264-9000 | GASKET | 1 | |
| 18 | 365-0194-0000 | LOCK NUT | 1 | |
| 20 | 421-2970-0000 | BEARING | 1 | |
| 21 | 421-1930-0000 | BEARING | 2 | |
| 24 | 411-3960-0000 | OIL SEAL | 1 | |
| 25 | 411-2610-0000 | OIL SEAL | 1 | |
| 27 | 441-0460-0000 | MULTI DISC BRAKE | 1 | |
| 34 | 432-1480-0000 | CIRCLIP | 1 | |
| 35 | 432-0730-0000 | CIRCLIP | 1 | |
| 38 | 431-0630-0000 | CIRCLIP | 1 | |
| 42 | 472-0270-0000 | TAB WASHER | 1 | |
| 44 | 463-0810-0000 | SCREW | 6 | |
| 45 | 461-1070-0000 | SCREW | 8 | |
| 46 | 462-1430-0000 | SCREW | 10 | |
| 47 | 461-1820-0000 | SCREW | 12 | |
| 48 | 462-1171-0000 | SCREW | 8 | |
| 52 | 438-3890-0100 | SPRING SHAFT | 4 | |
| 53 | 438-4344-0100 | SPRING SHAFT | 3 | |
| 57 | 467-0110-0101 | WASHER | 8 | |
| 58 | 469-0370-0000 | SCHNORR WASHER | 10 | |
| | | | | |

*Brevini USA, Inc.* 400 Corporate Woods Pky. Vernon Hills, IL 60061

Confidential Treatment Requested by Transocean Holdings LLC TRN-HCEC-00002133

CONFIDENTIAL TRN-MDL-00043870

brevini usa

DESCRIPTION: RAF50/I/3/FL250
TYPE:
VERSION:

DRAWING NO. 06/5560

| ITEM | PART NUMBER | DESCRIPTION | QTY. | REMARKS |
|---|---|---|---|---|
| 59 | 467-0130-0101 | WASHER | 8 | • |
| 60 | 469-0360-0000 | SCHNORR WASHER | 8 | |
| 62 | 451-0440-0000 | PLUG | 3 | |
| 63 | 451-0240-0000 | PLUG | 3 | |
| 64 | 451-0250-0000 | PLUG | 2 | |
| 65 | 451-0430-0000 | PLUG | 2 | |
| 66 | 417-0040-0100 | WASHER | 2 | |
| 67 | 417-0020-0100 | WASHER | 2 | |
| 68 | 417-0030-0100 | WASHER | 5 | |

*Brevini USA, Inc.* 400 Corporate Woods Pky. Vernon Hills, IL 60061

Confidential Treatment Requested by Transocean Holdings LLC TRN-HCEC-00002134

CONFIDENTIAL TRN-MDL-00043871

## APPENDIX 4A

*Hot Line Hose Reel*
COMPONENT DESCRIPTION

*Reference Item No.:* 3*

*Quantity Required:* 1 per reel

*Description:* Air Motor

*Manufacturer:* Fenner Fluid Power

*Part Number:* R33XXXR1

*Source:* Houston, Texas

Air-Dreco
1833 Joanna
Houston, Texas 77055

Telephone: 713-681-4601
Telefax: 713-681-1216

Manufacturer

Fenner Fluid Power
5885 11th Street
Rockford, Illinois 61109

Telephone: 815-874-5560
Telefax: 815-874-7853



Confidential Treatment Requested by Transocean Holdings LLC TRN-HCEC-00002136

CONFIDENTIAL TRN-MDL-00043873

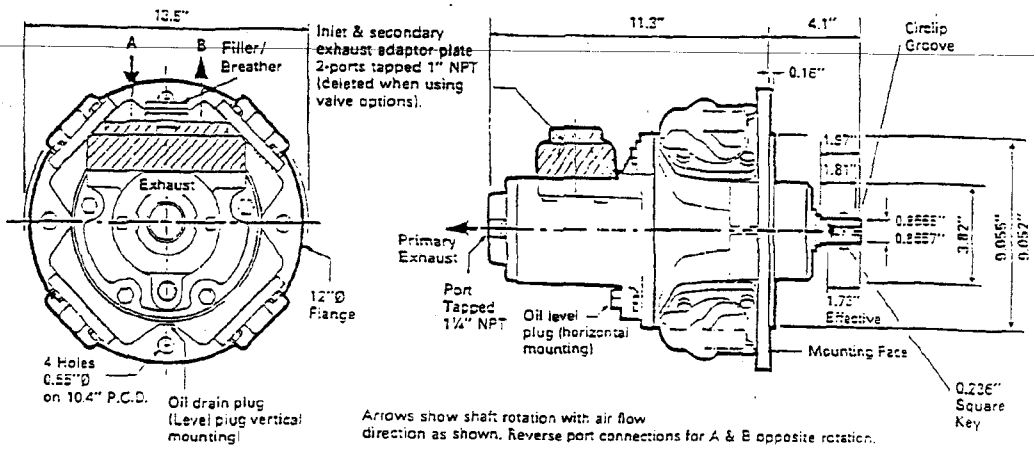


Arrows show shaft rotation with air flow direction as shown. Reverse port connections for A & B opposite rotation.

READING GRAPHS — Scales have been adjusted to enable bar and p.s.i. to be read from a common curve. Therefore only read p.s.i. with the left hand axis and bar with the right hand axis.

GRAPH 1 TORQUE - SPEED

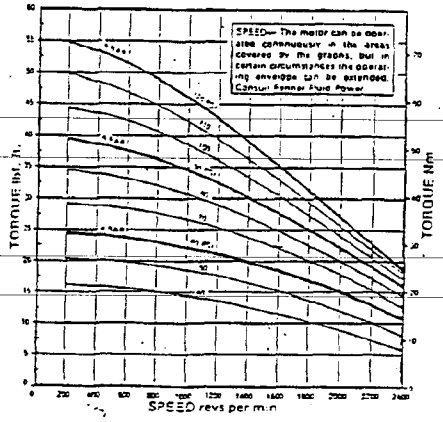


GRAPH 2 STARTING TORQUE - PRESSURE

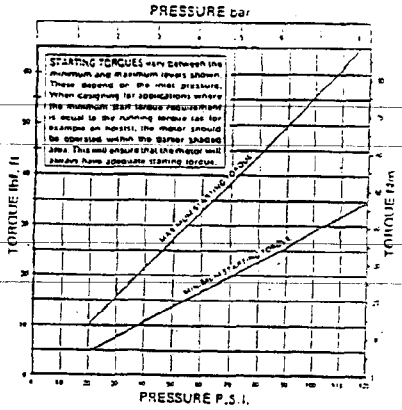


GRAPH 3 POWER - SPEED

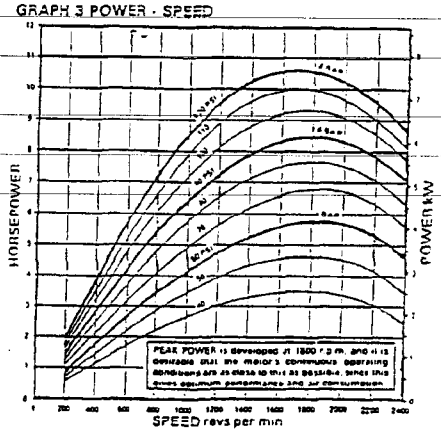


GRAPH 4 CONSUMPTION - SPEED

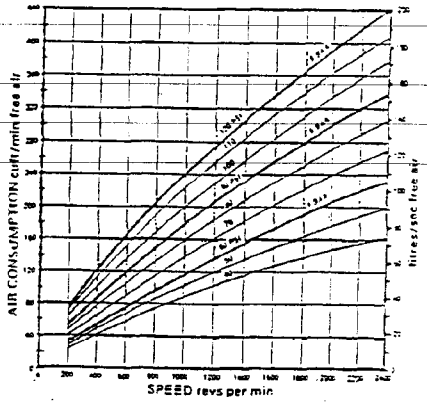


LUBRICATING OIL CAPACITIES – Horizontal 12.5fl oz Vertical 21fl oz. Use a good quality hydraulic oil with a viscosity of around 100cSt (460SSU) at 100°F.
AIRLINE FILTRATION AND LUBRICATION – Use 64 micron filtration or better. Choose a lubricator suitable for the flow required. Prior to initial start-up, inject oil into the inlet port. Lubricator drop rate: 3–4 drops/minute continuous operation. Lubricator drop rate: 6–10 drops/minute intermittent operation.

MASS (motor only) 107 lbs
MOMENT OF INERTIA of rotating parts 6lb in²
MAX OVERHUNG FORCE on shaft 300 lbf.
TEMPERATURE RANGE –4°F to +176°F.

Motor Foot Brackets see page 17. Control Valves page 18. Remote Controllers page 19. Brakes page 20.



Confidential Treatment Requested by Transocean Holdings LLC TRN-HCEC-00002137

CONFIDENTIAL TRN-MDL-00043874

## GRAPH 1 TORQUE - SPEED

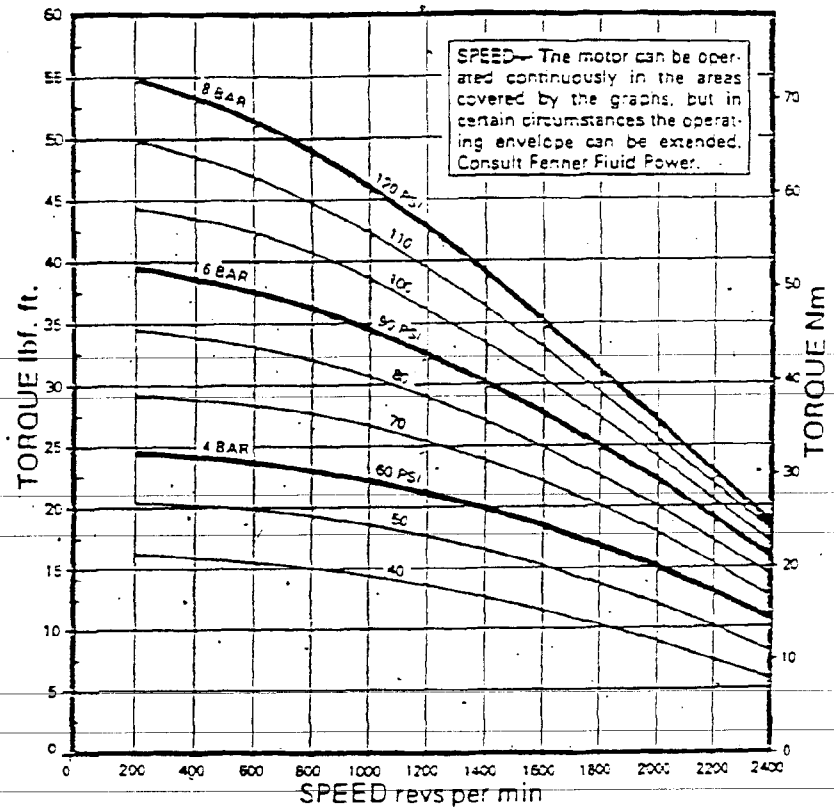

## GRAPH 2 STARTING TORQUE - PRESSURE

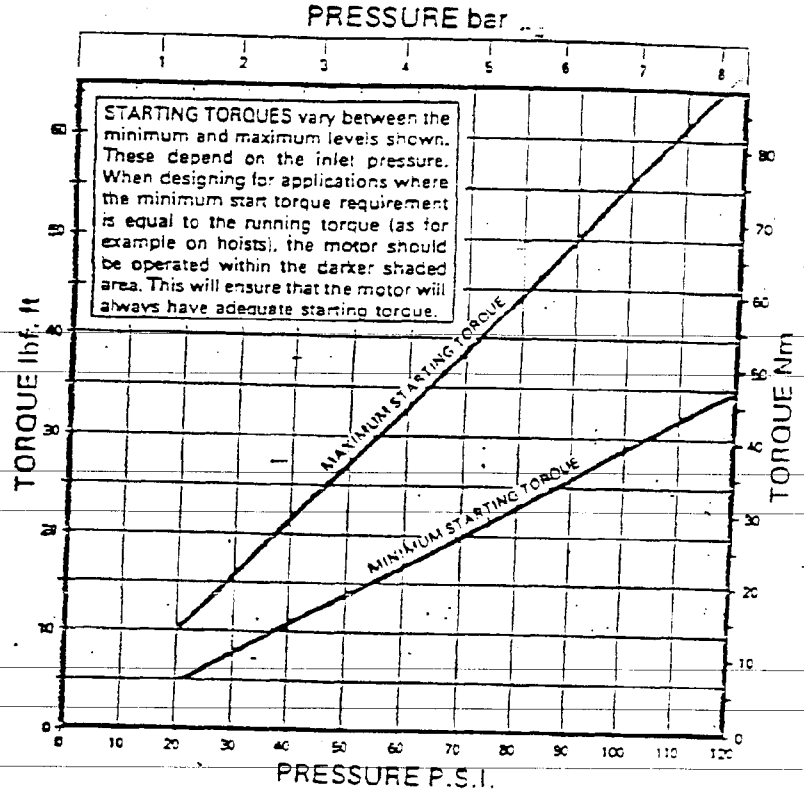

## GRAPH 3 POWER - SPEED

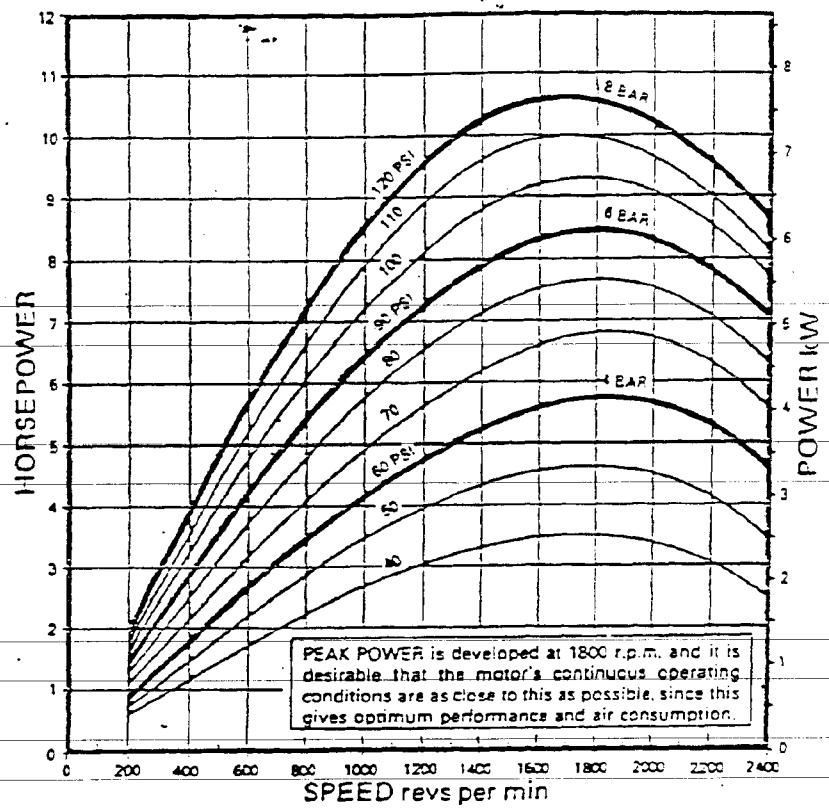

## GRAPH 4 CONSUMPTION - SPEED

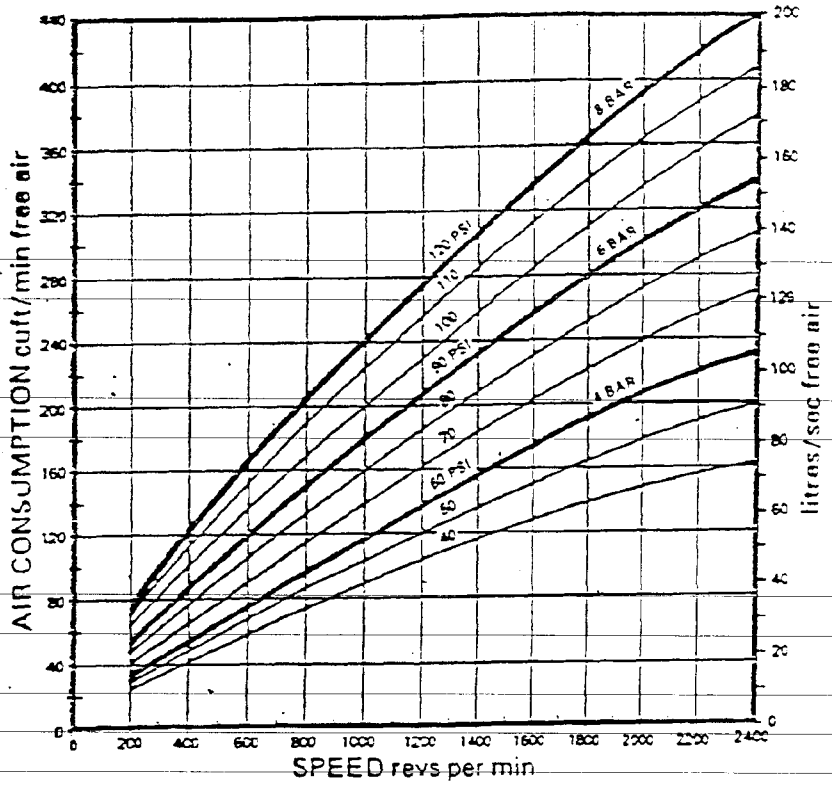

# MODEL ORDERING CODE

| R43 | K | 18 | H | 1 |
|---|---|---|---|---|
| DESIGN CODE RM410 AIR MOTOR | | NOMINAL GEAR RATIO (XX = NO GEARBOX) | | |

**DESIGN CODE**

| | |
|---|---|
| RM050 – R05 | RM410 – R43 |
| RM110 – R13 | RM510 – R52 |
| RM210 – R23 | RM610 – R62 |
| RM310 – R33 | |

**VALVE OPTIONS**

A = Pipe Adaptor Plate
H = Hand Controlled (HCV)
R = Remote Controlled (RCV)
X = No Valving or Adaptor Plate

**VALVE**

0 = BSP } Equal Power
1 = NPT }
2 = BIASED: C.W. LOWERING (BSP)
3 = BIASED: CCW LOWERING (BSP)
4 = BIASED: CW LOWERING (NPT)
5 = BIASED: CCW LOWERING (NPT)

**OUTPUT OPTIONS**

X = Motor Only Maleshaft
B = Motor + base mounted Gearbox (BG)
C = NEMA 'D' Mounting flange
D = Motor + Brake
F = Motor + Flange mounted Gearbox (FG)
K = Motor + Brake + FG
L = Motor + Brake + BG
M = Motor Only Femaleshaft
N = SAE 'C' Hydraulic Pump Output

EXAMPLE: R43K 18H1
RM410 MOTOR WITH BRAKE FLANGE MOUNTED 18:1 GEARBOX AND HAND CONTROLLED VALVE WITH NPT PORTS

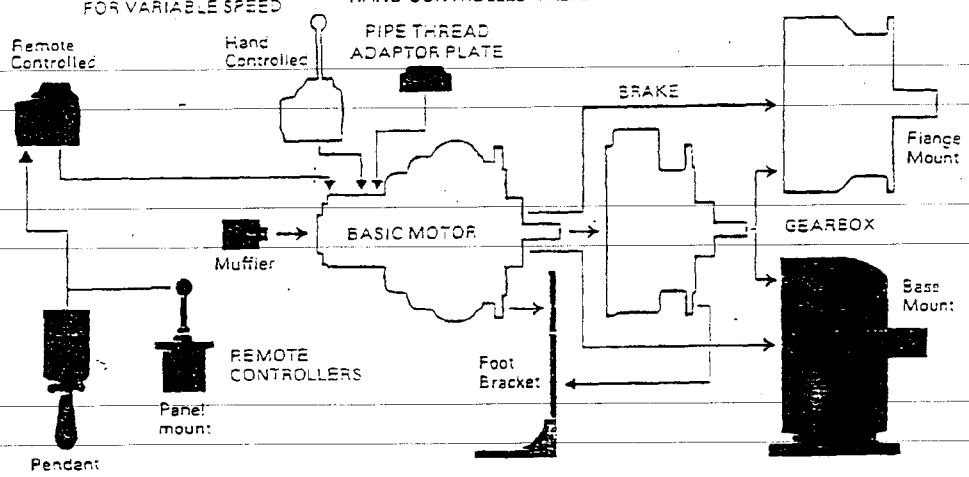



[illegible] Fenner Fluid Power ranges are [illegible] and some products have a variety of applications. [illegible] information can very often be supplied only [illegible] out of an individual product and for specific applications. If the relevant Fenner Catalogue does not supply all information you may require for this purpose you should refer to Fenner. However, before a proper reply can be given we may need to [illegible] the precise application in question or proposed.

Whilst every reasonable endeavour has been made to ensure accuracy, this publication cannot be considered to represent part of any contract, further expressed or implied. The publishers reserve the right to amend specifications at their discretion.



**Fenner Fluid Power**

Fenner Fluid Power, 5885 11th Street,
Rockford, Illinois 61109 [illegible] USA
Telephone: 815 874 [illegible]
Telex: 280655
Fax: 815 874 7853
Division of J H Fenner & Co Ltd

Fluid Power

U.K.
Ashton Road,
Harold Hill,
Romford, Essex
RM3 8UA
Tel: 01708 343851
Fax: 01708 373993

U.S.A.
5885 11th Street,
Rockford,
Illinios 61109.
Tel: 815 874 5560
Fax: 815 874 7853

# Combined Instruction and Service Manual for RM110, 210, 310, 410, 510 and 610 Globe Air Motors

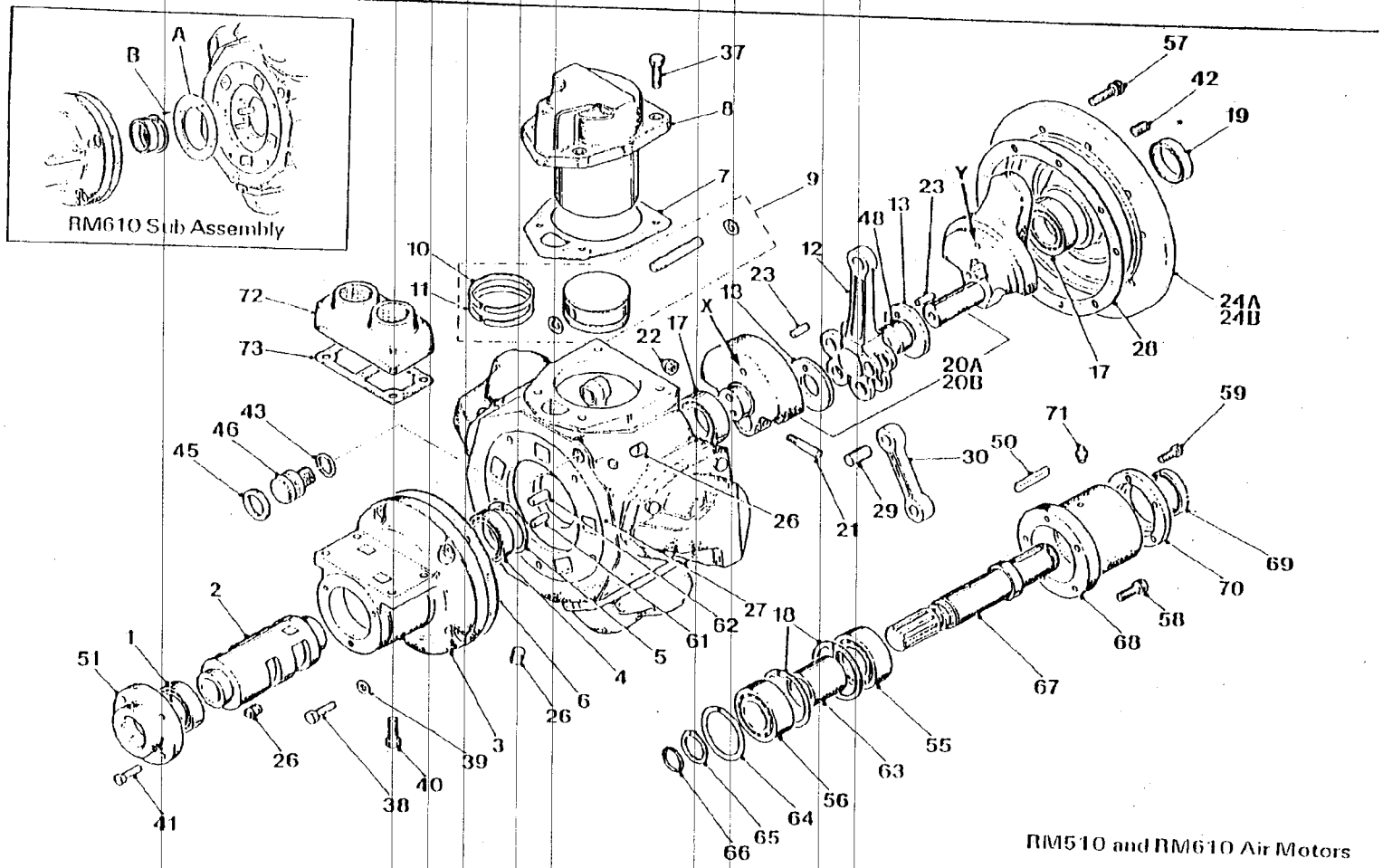


Confidential Treatment Requested by Transocean Holdings LLC

TRN-HCEC-00002143

CONFIDENTIAL

TRN-MDL-00043880

Confidential Treatment Requested by Transocean Holdings LLC



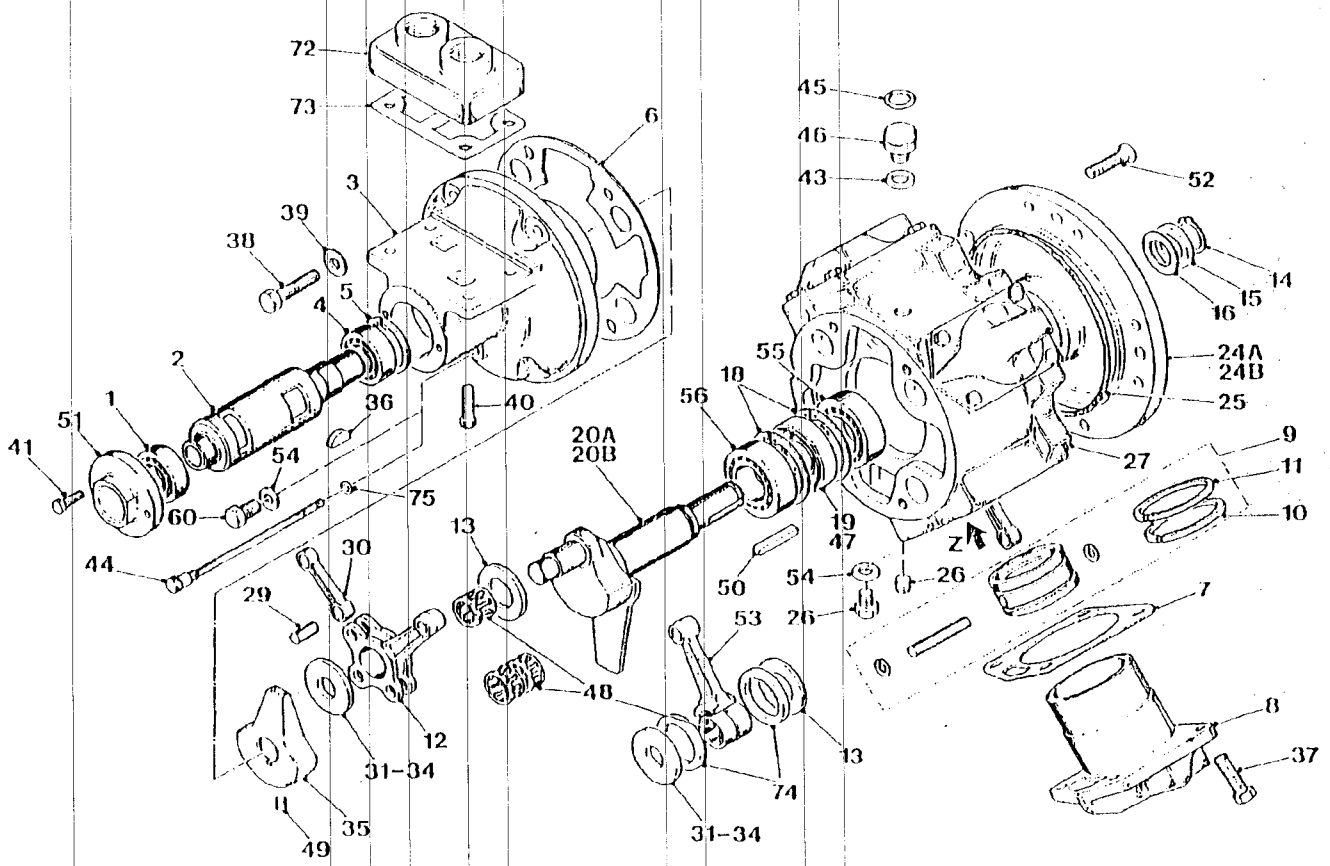


RM110, 210, 310 & 410 Motors

CONFIDENTIAL

Confidential Treatment Requested by Transocean Holdings LLC

TRN-HCEC-00002145

TRN-MDL-00043882

## When Ordering Spares, Quote Model Number e.g. 230HX (stamped on output flange of motor unit)

| Item | Description | No. off | MOTOR SIZE 110 | 210 | 310 | 410 | 510 | 610 |
|---|---|---|---|---|---|---|---|---|
| 1 | Rotary Valve Bearing (outer) | 1 | 807-020 | 807-020 | 807-002 | 807-006 | 807-006 | 807-066 |
| 2 | Rotary Valve | 1 | 130-006 | 230-006 | 330-006 | 430-006 | 520-006 | 620-006 |
| 3 | Rotary Valve Housing | 1 | 130-011 | 230-011 | 330-011 | 430-011 | 520-011 | 620-011 |
| 4 | Rotary Valve Bearing (inner) | 1 | 807-021 | 807-021 | 807-001 | 807-005 | 807-005 | 807-055 |
| 5 | Rotary Valve Bearing Circlip | 1 | 804-051 | 804-051 | 804-054 | 804-066 | 804-066 | 804-070 |
| 6 | Rotary Valve Housing Gasket | 1* | 100-001 | 200-001 | 300-001 | 430-001 | 510-001 | 620-001 |
| 7 | Cylinder Gasket | 4-5* | 110-030 | 210-030 | 310-030 | 430-030 | 510-030 | 510-030 |
| 8 | Cylinder | 4-5 | 110-082 | 210-082 | 310-082 | 430-082 | 510-082 | 510-082 |
| 9 | Piston Assembly | 4-5 | 100-902 | 200-902 | 300-902 | 430-902 | 520-902 | 520-902 |
| 10 | Compression Ring | 4-5* | 100-024 | 200-024 | 300-024 | 430-024 | 520-024 | 520-024 |
| 11 | Oil Control Ring | 4-5* | 100-022 | 200-022 | 300-022 | 430-022 | 520-022 | 520-022 |
| 12 | King Rod | 1 | — | 230-077 | 320-077 | 430-077 | 520-077 | 520-077 |
| 13 | Crankshaft Spacer | 1 | 100-013 | 230-013 | 320-013 | 430-053 | 520-052 | 520-052 |
| 14 | Crankshaft Circlip | 1 | 804-006 | 804-009 | 804-012 | 804-016 | — | — |
| 15 | Crankshaft Spacer | 1 | 100-035 | 300-035 | 310-035 | 430-035 | — | — |
| 16 | Crankshaft Spacer Shim | 5 | 100-049 | 300-049 | 310-049 | 430-049 | — | — |
| 17 | Crankshaft Bearing | 2 | — | — | — | — | 807-062 | 807-062 |
| 18 | Crankshaft Bearing Circlip | 2 | — | 804-058 | 804-062 | 804-068 | 804-068 | 804-060 |
| 19 | Crankshaft Oilseal | 1* | 808-043 | 808-044 | 808-045 | 808-048 | 801-047 | 808-047 |
| 20A | Std Crankshaft Assembly | 1 | 110-901 | 210-901 | 310-901 | 430-901 | 520-901 | 520-901 |
| 20B | SAE Crankshaft Assembly | | — | — | — | 430-904 | 520-113 | 520-113 |
| 21 | Crank Bolt | 1 | — | — | — | — | 510-088 | 510-088 |
| 22 | Crank Nut | 1 | — | — | — | — | 801-007 | 801-007 |
| 23 | Spring Dowel | 2 | — | — | — | — | 806-013 | 806-013 |
| 24A | Std Flange Plate | 1 | 130-076 | 230-076 | 330-076 | 430-076 | 520-076 | 520-076 |
| 24B | SAE Flange Plate | 1 | — | — | — | 430-097 | 520-904 | 520-904 |
| 25 | Flange Plate Seal | 1* | 808-033 | 808-028 | 808-026 | 808-018 | — | — |
| 26 | Plug | 1-3 | 816-074 | 816-071 | 816-071 | 812-020 | 816-071 | 816-071 |
| 27 | Engine Case | 1 | 130-012 | 230-012 | 330-012 | 430-012 | 520-012 | 620-012 |
| 28 | Engine Case Gasket (520) | 1* | — | — | — | — | 510-090 | 510-090 |
| 29 | Queen Rod Pivot | 3-4 | — | 230-081 | 320-081 | 430-081 | 520-081 | 520-081 |
| 30 | Queen Rod | 3-4 | — | 230-078 | 320-078 | 430-078 | 520-078 | 520-078 |
| 31 | Crank Spacer SELECT | 1 | 100-052 | 230-052 | 320-052 | 430-052 | — | — |
| 32 | Crank Spacer ON | 1 | 100-053 | — | 320-053 | 430-053 | — | — |
| 33 | Crank Spacer ASSEMBLY | 1 | 100-054 | 230-054 | 320-054 | 430-054 | — | — |
| 34 | Crank Spacer | 1 | 100-056 | 230-056 | — | — | — | — |
| 35 | Balance Weight | 1 | 130-010 | 230-010 | 330-010 | 430-010 | — | — |
| 36 | Woodruff Key | 1 | 811-016 | 811-010 | 811-010 | 811-009 | — | — |
| 37 | Cylinder Bolts | 16-20 | 802-020 | 802-037 | 802-053 | 802-054 | 802-074 | 802-074 |

| Item | Description | No. off | MOTOR SIZE 110 | 210 | 310 | 410 | 510 | 610 |
|---|---|---|---|---|---|---|---|---|
| 38 | Valve Housing Bolts | 4-10 | 802-020 | 802-033 | — | 802-054 | 802-073 | 802-054 |
| 39 | Washer for Item 38 | 4-10 | — | 802-033 | — | — | 803-015 | 803-014 |
| 40 | Adapter Plate Bolts | 4 | 802-020 | 802-020 | 802-032 | 802-054 | 802-054 | 809-002 |
| 41 | Exhaust Cover Bolts | 2-4 | 802-016 | 802-016 | 802-032 | 802-033 | 802-033 | 802-033 |
| 42 | Flange Plate Plugs | 5 | — | — | — | — | 815-008 | 815-008 |
| 43 | Breather Plug Seal | 1* | 808-008 | 808-008 | 808-008 | 808-008 | 808-008 | 808-008 |
| 44 | Dipstick (vertical mounting) | 1 | 100-040 | 200-040 | 300-040 | — | — | — |
| 45 | Seal (transit only) | 1 | 808-004 | 808-004 | 808-004 | 808-004 | 808-004 | 808-004 |
| 46 | Breather Plug | 1 | 130-066 | 130-066 | 130-066 | 130-066 | 130-066 | 130-066 |
| 47 | Oil Seal Carrier | 1 | — | — | — | 430-083 | — | — |
| 48 | Needle Bearing | 1-2 | 807-042 | 807-048 | 807-046 | 807-045 | 807-047 | 807-047 |
| 49 | Grub Screw | 1-5 | 815-012 | 815-001 | 815-002 | 815-003 | — | — |
| 50 | Key | 1 | 811-007 | 811-001 | 811-003 | 811-003 | 811-030 | 811-030 |
| 51 | Rotary Valve Exhaust Cover | 1 | 130-005 | 230-005 | 330-005 | 430-005 | 520-005 | 620-005 |
| 52 | Countersink Flange Bolts | 4-8 | 810-003 | 810-001 | 810-002 | 809-001 | — | — |
| 53 | Connecting Rod (slipper type) | 4 | 100-072 | — | — | — | — | — |
| 54 | Nylon Washer | 1 | — | — | — | 803-004 | — | — |
| 55 | Output Shaft Bearing (outer) | 1 | 807-007 | 807-008 | 807-009 | 807-013 | 807-063 | 807-063 |
| 56 | Output Shaft Bearing (inner) | 1 | 807-007 | 807-008 | 807-009 | 807-012 | 807-012 | 807-012 |
| 57 | Flange Plate Cap Screws | 10 | — | — | — | — | 809-001 | 809-001 |
| 58 | Output Housing bolts | 5 | — | — | — | — | 809-002 | 809-002 |
| 59 | Output Housing Cover Bolts | 5 | — | — | — | — | 802-016 | 802-016 |
| 60 | Oil Level Plug | 1 | 812-001 | 812-001 | 812-001 | 812-001 | — | — |
| 61 | Drive Pin (dia. 10mm) | 1 | — | — | — | — | 806-001 | 806-001 |
| 62 | Drive Pin (dia. 12mm) | 1 | — | — | — | — | 806-002 | 806-002 |
| 63 | Output Shaft Bearing Spacer | 1 | — | — | — | — | 518-001 | 518-001 |
| 64 | Output Shaft Spring Ring | 1 | — | — | — | — | 518-004 | 518-004 |
| 65 | Output Shaft Circlip | 1 | — | — | — | — | 804-017 | 804-017 |
| 66 | Output Shaft Seal | 1* | — | — | — | — | 808-004 | 808-004 |
| 67 | Output Shaft | 1 | — | — | — | — | 518-003 | 518-003 |
| 68 | Output Shaft Housing | 1 | — | — | — | — | 518-005 | 518-005 |
| 69 | Output Shaft Oil Seal | 1* | — | — | — | — | 808-042 | 808-042 |
| 70 | Output Shaft Housing Cover | 1 | — | — | — | — | 518-002 | 518-002 |
| 71 | Output Shaft Grease Nipple | 1 | — | — | — | — | 816-015 | 816-015 |
| 72 | Inlet Adapter Plate | 1 | 130-003 | 230-003 | 330-003 | 430-003 | 520-003 | 520-003 |
| 73 | Inlet Adapter Plate Gasket | 1* | 130-004 | 130-004 | 330-004 | 430-004 | 430-004 | 430-004 |
| 74 | Retaining Ring | 2 | 100-018 | — | — | — | — | — |
| 75 | Dipstick Seal | 1* | 808-008 | 808-008 | 808-008 | — | — | — |
| 76 | Seal Kit | 1 | 139-911 | 239-911 | 339-911 | 439-910 | 529-911 | 629-911 |

Please note Item 76 (Seal Kit) includes all items marked thus: *

RM610 Sub Assembly Parts: A Bearing cap 620-045 1 off
B Screw 810-016 4 off

CONFIDENTIAL

Confidential Treatment Requested by Transocean Holdings LLC

TRN-HCEC-00002146

TRN-MDL-00043883

NO. When first running the motor some light oil should be injected into the inlet connection to ensure adequate lubrication until the airline lubrication is established.

# Installation

## 1 Mounting Positions

The motor is normally mounted in a horizontal position with the filter/breather plug towards the top (Fig. 1). It may also be mounted with the shaft vertically downwards (Fig. 2). As supplied the motors have been run up and tested using protective oil and then drained for transit. It is vital that each motor is re-filled to the correct oil level as shown below. The RM110 - 310 motors have a dipstick for vertical mounting (Fig. 2) and the lower mark on this dipstick provides the oil level. Oil levels are achieved on motors in the horizontal position by filling to the plugs marked part 60 and (RM510 motor) plug 26 (fitted in housing 3). The vertical oil level position for the RM410, RM510 and RM610 motors is a combined horizontal drain and vertical level plug (part number 26).

To fill motors with oil remove the combined breather and oil filler plug part no. 46. Ensure breather plug is in the vertical position. It may be necessary to fit an elbow between the breather plug and the motor (see Fig. 2).

## 2 Recommended Lubricants for normal ambient temperature (0-32 Deg. C.)

| | *Crankcase* | *Airline* |
|---|---|---|
| Shell | TELLUS 100 | TELLUS 37 |
| B.P. | ENERGOL HL175 | ENERGOL HLP65 |
| Esso | NUTO H64 | FANOX 38 |
| Regent | REGAL PEJRO | RANDO 'A' |
| Castrol | HYSPIN 175 | HYSPIN 70 |
| Mobil | D.T.E. EXTRA HEAVY | ALMO OIL NO. 1 |

For extremes of ambient temperatures consult the manufacturers

**Approximate Capacity (ml/litres)**

| | Horizontal | Vertical |
|---|---|---|
| RM110 | 75 | 150 |
| RM210 | 300 | 450 |
| RM310 | 350 | 600 |
| RM410 | 500 | 940 |
| RM510 | 1.1 lit | 2.1 lit |
| RM610 | 1.1 lit | 2.1 lit |

## 3 Air Inlet

The motor is normally supplied with the inlet/exhaust adaptor plate (72). All motors are reversible.

## 4 Air Supply. Maximum Working Pressure 8 bar-120 psi

The air supply must be clean and free from moisture. An airline filter and mist lubricator should be incorporated in the air supply line, located immediately before the motor. If the rated performance of the motor is to be obtained all valves and pipework must be of adequate size. Valves should be sited as close as possible to the motor. For short pipe runs e.g. up to 2 metres the supply line should be the same size as the motor ports and larger for longer runs.

## 5 Fitting

Mount motor in operating position. Check oil level. (as 1 above). Before connecting to the air supply blow out air lines to remove any loose scale, swarf or abrasive dust which may be present. Remove the red plastic dust-caps and the 'O' ring seal (45).

For unidirectional operation check the required direction of rotation and connect the air supply line to the appropriate port on the inlet/exhaust adaptor plate (72) leaving the other port open or pipe downwards if exposed to the atmosphere.

The motor should not be allowed to race. Always operate within the catalogue speed curves.

# Maintenance

## 6 Air Supply

The air filter should be drained regularly and examined for clogging of the element.
The air line lubricator should be replenished as required and set to give 3-4 drops per minute RM110
4-5 drops per minute RM210
5-6 drops per minute RM310
6-8 drops per minute RM410
6-8 drops per minute RM510
8-10 drops per minute RM610

Double the above drip rate if intermittent operation.

## 7 Motor

The oil level in the motor casing must be maintained. The frequency of replenishment will depend upon the application and usage.

The motor case should be drained and refilled after 25 hours of initial running and every 200 hours thereafter or sooner if found necessary e.g. (contamination of oil by water from the air line.)

## 8 Servicing

### A. Preparation for Stripping

Remove the motor from its operating position to a clean working surface ready for stripping, externally clean the motor ready for opening.
Drain the oil from the motor casing by removing the drain plug (26).
Stripping and re-assembly will be simplified if the crankshaft (20 A/B) or output shaft (67) RM510 and RM610 is held vertically in a soft-jawed vice or supported on suitable packing to raise the shaft clear of the working surface.

### B. Removal of Rotary Valve Housing assembly

Remove inlet/exhaust adaptor plate (72) or control valve (if fitted).
Remove valve cover (51).
Release bolts (38) and valve bush housing (3) can be eased upward.
On RM110 to 410 motors remove grub screw (49) together with the valve side balance weight (number 35).
All motors — carefully remove rotary valve (2) from the housing (3). This is generally done from the inside outwards and inspect both the rotary valve and the housing for wear. The normal clearance at manufacture between these two components is .002-.003" (.05-.076). Excessive wear will cause air leakages and loss of efficiency of the unit.

### RM110 Motors only

Lift the spacing washers (31/34) out. Slightly rotate the shaft backwards and forwards and inspect the amount of wear which is present on the big end assembly. Remove the top retaining ring (part no. 74). All the connecting rods can then be lifted upwards and pushed outwards towards the cylinders. Remove cylinder bolts (37) and the entire piston assembly can be withdrawn from the motor unit.

### Motors RM210/310/410

These units are of the king rod variety and again it is wise to slightly rotate the crankshaft (part no. 20A/B) in either direction to test any excessive wear on either the king rod bearing or the pivot pins (part no. 29). Having first removed the outer spacing washer (31/34) withdraw pivot pins (part no. 29). This procedure is usually done with a bent rod withdrawing the pins from the inside outwards. Remove all cylinder cap bolts (part 37) and by pushing the queen rods (part 30) outwards the entire piston and rod assembly can be removed from the motor. Turn the motor unit over to extract the crank bearing or bearings (part no. 48). The main king rod (part no. 12) can then be lifted upwards and tilted over the top of the crankshaft. Remove the main king rod, piston and cylinder from the motor. Remove the output shaft circlip (14), spacer (15) and shims (16). Remove the countersunk bolts (52) holding the output flange (24/A & B) on to the engine case (part no. 27). The engine case (27) can be removed.

Drift the crankshaft inwards from the flange plate (24A). To remove the outer shaft bearings (55 and 56) drift to their respective sides as they are located inwardly on two circlips (part no. 18).

### RM 510 & 610 Motors

Remove bolts (58) holding the output shaft assembly.
Remove bolts (57) and the output flange (24A/B). This will then expose the inside of the motor. Turn the crankshaft so that one rod is at T.D.C. Remove that cylinder, the retaining circlip and gudgeon pin. Push out from the piston and the entire assembly can be removed.
Repeat this procedure in turn until all the pistons and cylinders have been removed. On this motor the balance weight and

CONFIDENTIAL

Confidential Treatment Requested by Transocean Holdings LLC

TRN-HCEC-00002147

crank assembly is built as one item and this can now be removed. Remove locking nut (22) and the tapered pin (21). Both balance weights (part no. 20A and 20B) can now be disengaged. This will expose the king rod and queen rod assembly. To remove the queen rod remove the pivot pin (29).

## All Motors

Inspect the clearance of the pivot pins (29) in queen rod (30) & king rod (12). Inspect the gudgeon pin in both the piston and all rods. Check for wear on the main crankshaft (20A, 20B) and on the main big end bearing (no. 48). The wear in the cylinder bores can be checked by removing each compression ring (10) and pushing it into the cylinder bore (8). The ring gap should be in the region of .003 to .004 (.075 - 0.10mm). Bore wear will cause loss of power and inject high pressure air into the case & oil could be ejected from the breather plug (part no. 46). All other parts should be thoroughly cleaned and inspected for wear. *Spare parts can be found from the list.*

The motor number and its code should be incorporated in any spares order. This is always stamped on the main flange plate (24) located near the breather plug hole 46, i.e. 230 Hx.

Fenner provide a seal kit for each motor and it is strongly recommended that new oil seals, seals and gaskets are used throughout.

# 9 Assembly Procedure

All parts should be clean and liberally coated with oil.

## RM510 and RM610 motor only

Assemble the spacing washer (13) on to the crankshaft outer section locating the dowell pin (23). Assemble bearing (48) and the king rod (12). Assemble all four queen rods (part no. 30) into the king rod (12) locating with pivot pins (no. 29).

Fit final location washer (13) to close the assembly.

Ensure that the drive peg (23) is fitted on to the inner balance weight (20A/B). Closed together and finally rotated to locate correctly by passing a 12mm dia. bar between the holes marked X and Y on the drawings. Once this assembly is located the locking dowell (21) and its nut can be assembled, remove the 12mm bar and ensure mechanism is free. Locate assembly into open engine case. Ensure each rod projects into its correct cylinder.

Rotate the unit so that the main king rod comes to top dead centre, fit the piston and gudgeon pin, ensure gudgeon pin circlip is correctly located. Fit gasket (7) to cylinder (8).

Fit pistons into cylinder bore using a piston ring clamp.

Bolt cylinder (8) on to engine case (27). Rotate the crank to the next top dead centre position and repeat the procedure. Turn crank 360 degrees to check correct functioning. Fit gasket (28) and the output flange (24A/B). Turn motor over 180 degrees to allow the valve to be fitted.

Lubricate Valve (2) & Inside Bore of Housing (3).

Rebuild the valve assembly in the reverse order. Check it rotates freely. Fit valve assembly on to the motor ensuring the different size drive dowells (61) and (62) are located in the crank shaft. The remaining build procedure is the reverse to initially dismantling.

## RM110 to 410 Motors

Output shaft assembly. Ensure both circlips and bearing are fully home. Oilseal (19) lip must face inwards and be lubricated. RM410 motor has also a spacer fitted between bearings. Push crank shaft fully home and locate the spacer washer (15) and circlip (14). Check gap, shim up (16) for minimum end float. Fit new seal (25) and output flange (24) to the engine case (27). Turn motor vertical (shaft downwards).

## RM110 only

Fit crank spacer (13) bearing (48) and the inner retaining ring (74) (internal bevel uppermost). Assemble con rods on pistons. Assemble all pistons into their cylinder pots (8) using ring clamp.

Fit all pistons/cylinder on to engine case.

Carefully lift the connecting rods (53). Lift upwards and locate the shoe on the connecting rod between the bearing (48) and the retaining ring (74). Repeat for all cylinders. Locate the outer retaining ring (74) (internal bevel downwards) over all shoes on the connecting rods (53). Fit the packing spacer (31/34). Refer to motor spacing assembly. Paragraph No. 10.

## Assembly of 410 Big End

Fit all connecting rods (30) & (12) on to gudgeon pins and pistons and using ring clamp assemble into cylinders. Ensure gudgeon pin circlips are seated correctly.

Rotate motor until crank is nearest to breather plug (46). Fit the crank spacer (13) push the piston to bottom dead centre within the cylinder (8). Insert the king rod into the engine case (27) lifting and rotating the king rod (12) over the top of the crankshaft (20A/B). Bolt cylinder in position, fit the 2 crank bearings (48). Fit remaining cylinders/pistons and attach to king rod (12) with the pivot pin (29). Rotate 360 degrees to ensure parts are correctly fitted. Locate the spacing washer (31–34) and spacing as paragraph 10.

## Crank assembly instructions for the 210 and 310 motors.

Fit the 3 queen rods (30) on to piston assembly (9) and assemble into the cylinder pot (8) complete with gasket (7). Fit piston assembly (9) on to the king rod (10) ensuring gudgeon pin clips are correctly positioned. (RM310 motor). Assemble a ring clamp (dimensions shown on the sketch provided on back page) on to the king rod piston.

Fit the crank spacer (13) to the crankshaft (20A/B). Rotate the crankshaft until the crankpin is in the vertical position (nearest the breather plug 46). Feed king rod (12) complete with its piston assembly through the aperture marked 'Z' on drg.

Twist and lift the rod over the end of the crank pin.

Fit crank pin bearing or bearings. Feed the cylinder pot (8) complete with its gasket (7) on to the piston. The ring clamp is ejected inwards from the piston. Work clamp off sideways from the king rod.

Bolt the cylinder pot into position and feed the remaining cylinders completely assembled through the various holes and locate the inner end of the connecting rods with the king rod fixing with pin (29).

Rotate the motor 360 degrees to ensure correct fitting. Fit spacing washer (30/34) and refer to paragraph 10 for spacing the motor unit.

## Assembly of the Valve Housing

This is reverse procedure to dismantling. Smear oil to external surface of valve (2) and to the bore of valve housing (3).

# 10 Spacing RM110 – 410 motors

Please refer to (Fig. 4) Measure dimension (A) from the crank washer to the face of the engine case and also dimension (B) from the rotary valve face to the inside of the gasket. Select the correct shim washer from the list (31–34) to obtain clearance.

Rotate the crankshaft until the balance weight is at the bottom dead centre position, rotate the rotary valve until the balance weight is at the bottom position. Assemble the valve housing (3) on to the engine case (27). Rotate the output shaft in both directions and viewing the rotary valve (2) through the exhaust cover (51) ensure that the valve is correctly following the output shaft direction, this checks that both crank and valve slot are correctly engaged.

Replace all drain plugs and refill with oil. Spray some light oil into the inlet and exhaust ports and connect the unit to a low pressure supply and allow the unit to run on the bench for a short period of time prior to refitting the unit into full service.

# 11 Fault Finding

1. The RM series motors are designed to perform at their rated capacities for long periods of time. Faults can develop for the following reasons:

(A) Lack of lubrication. This will lead to rapid wear, internal seizure, loss of power or excessive air leakage.

(B) Faults in the air supply system:

1. failure to remove the plastic protective dust caps

2. insufficient air pressure at the motor caused by (a) supply pipe line or valve too small (b) if the exhaust is piped away excessive back pressure due to small bore pipes (c) compressor of insufficient capacity (d) clogged airline filter (e) *the air pressure should remain at the required pressure when the motor is operating at full potential.*

If the air pressure reduces considerably from the stationary to the rotating conditions then the supply line or the compressed air available is inadequate for the service operation of the motor.

The motor should always be supplied with clean moisture free and lubricated air. The better the quality of air the less attention will be required to the motor unit.

TRN-MDL-00043884

**APPENDIX 4B**

*Hot Line Hose Reel*
COMPONENT DESCRIPTION

*Reference Item No.:* 3*

*Quantity Required:* 1 per reel

*Description:* Directional Valve

*Manufacturer:* Fenner Fluid Power

*Part Number:* 321-913

*Source:* Houston, Texas

Air-Dreco
1833 Joanna
Houston, Texas 77055

Telephone: 713-681-4601
Telefax: 713-681-1216

Manufacturer

Fenner Fluid Power
5885 11th Street
Rockford, Illinois 61109

Telephone: 815-874-5560
Telefax: 815-874-7853



Confidential Treatment Requested by Transocean Holdings LLC TRN-HCEC-00002148

CONFIDENTIAL TRN-MDL-00043885

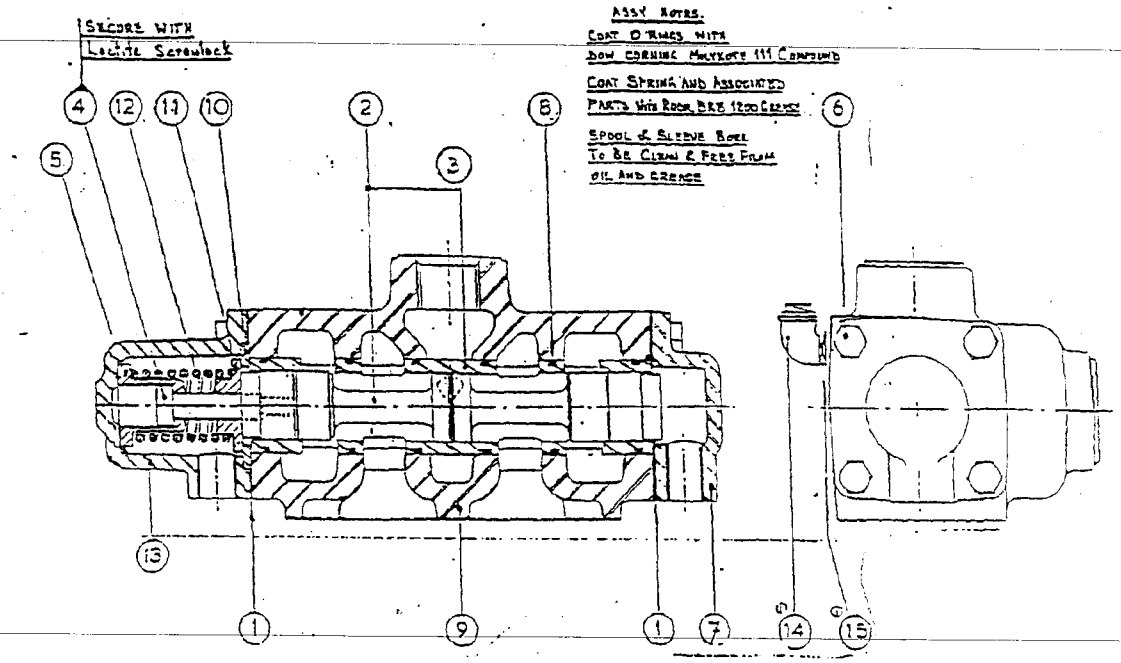


| ITEM | DESCRIPTION | RCV 110 EQUAL POWER PART NO. | QTY | RCV 210 EQUAL POWER PART NO. | QTY | RCV 310 EQUAL POWER PART NO. | QTY | RCV 410 EQUAL POWER PART NO. | QTY | RCV. 510 EQUAL POWER PART NO. | QTY |
|---|---|---|---|---|---|---|---|---|---|---|---|
| 1 | END CAP GASKET | 111-066 | 2 | 111-066 | 2 | 311-066 | 2 | 311-066 | 2 | 521-066 | 2 |
| 2 | VALVE SPOOL | 111-062 | 1 | 111-062 | 1 | 311-062 | 1 | 311-062 | 1 | 521-062 | 1 |
| 3 | VALVE SLEEVE | 111-061 | 1 | 221-061 | 1 | 311-061 | 1 | 431-061 | 1 | 521-061 | 1 |
| 4 | SHOULDER SCREW | 817-003 | 1 | 817-003 | 1 | 817-002 | 1 | 817-002 | 1 | 817-002 | 1 |
| 5 | SHAFT GUIDE | 111-071 | 1 | 111-071 | 1 | 311-071 | 1 | 311-071 | 1 | 521-071 | 1 |
| 6 | HEX BOLT | 802-016 | 8 | 802-016 | 8 | 802-032 | 8 | 802-032 | 8 | 802-033 | 8 |
| 7 | END CAP-PLAIN | 111-065 | 1 | 111-065 | 1 | 311-065 | 1 | 311-065 | 1 | 521-065 | 1 |
| 8 | O'RING | 808-027 | 6 | 808-027 | 6 | 808-010 | 6 | 808-010 | 6 | 808-013 | 6 |
| 9 | VALVE BODY | 111-060 | 1 | 221-060 | 1 | 321-060 | 1 | 431-060 | 1 | 521-060 | 1 |
| 10 | SPACER | 111-068 | 1 | 111-068 | 1 | 311-068 | 1 | 311-068 | 1 | 521-068 | 1 |
| 11 | WASHER | 111-072 | 1 | 111-072 | 1 | 311-072 | 1 | 311-072 | 1 | 521-072 | 1 |
| 12 | SPRING | 814-017 | 1 | 814-017 | 1 | 311-073 | 1 | 311-073 | 1 | 814-019 | 1 |
| 13 | END CAP-SPRING | 111-064 | 1 | 111-064 | 1 | 311-064 | 1 | 311-064 | 1 | 521-064 | 1 |
| 14 | ELBOW | 816-049 | 1 | 816-049 | 1 | 816-048 | 1 | 816-048 | 1 | 816-048 | 1 |
| 15 | PLUG | 816-063 | 3 | 816-063 | 3 | 816-061 | 3 | 816-061 | 3 | 816-061 | 3 |

VALVE SPOOL & SLEEVE COMBINATION

RCV 110 - 111-913
RCV 210 - 221-913
RCV 310 - 321-913
RCV 410 - 431-913
RCV 510 - 521-913

RCV SEAL KITS

~~100-910 RCV 110/210~~
300-910 RCV 310/410
500-910 RCV 510

Confidential Treatment Requested by Transocean Holdings LLC TRN-HCEC-00002149

CONFIDENTIAL TRN-MDL-00043886

# Valve Options

This range of bolt on valves offers very sensitive speed and directional control. One frictionless matched spool and sleeve assembly is offered with two alternative means of actuation.

CONFIGURATION

As standard these valves can be supplied with either EQUAL POWER OR BIASED POWER spools, the latter is suitable for hoisting applications (normal power for lifting - reduced power for lowering).

The direction of reduced power must be stated when ordering CW or CCW, when viewed on the output shaft of the motor or geared motor.

1. REMOTELY CONTROLLED (RCV) - This option is usually controlled from a remote position by one of the PC series or LC2 units shown opposite. A variable air pilot signal is applied to either end of the valve spool, depending on the required direction of motor rotation. The pilot pressure range is between 1.4 bar (20 psi) and 4.8 bar (70 psi), increased pilot pressure gives increased speed. The valve is spring centred to neutral.

2. HAND CONTROLLED (HCV) - The control valve spool is operated directly by a lever mechanism. Speed increase is obtained as the lever is moved in either direction from the centre (neutral) position.

PRESSURE DROP - Minimal pressure drop will be experienced through the valves, having the effect of maintaining the output torque whilst reducing the motor output speed by approximately 10–15% at 6 bar (90 psi) at maximum power. The starting torque remains unaffected.

REMOTE CONTROL VALVE

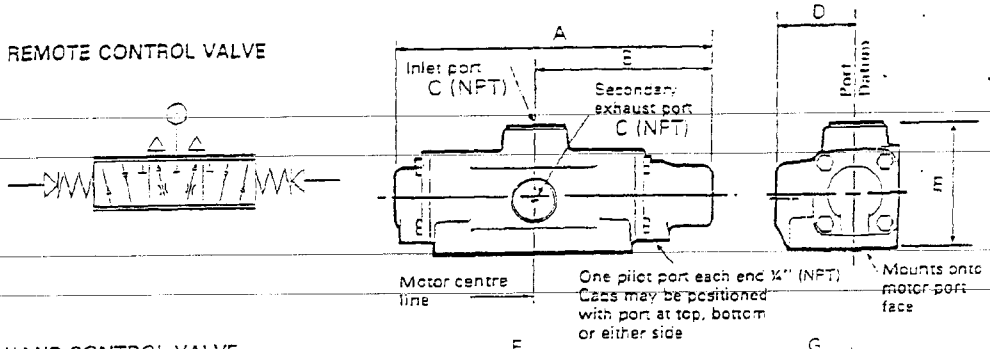


HAND CONTROL VALVE

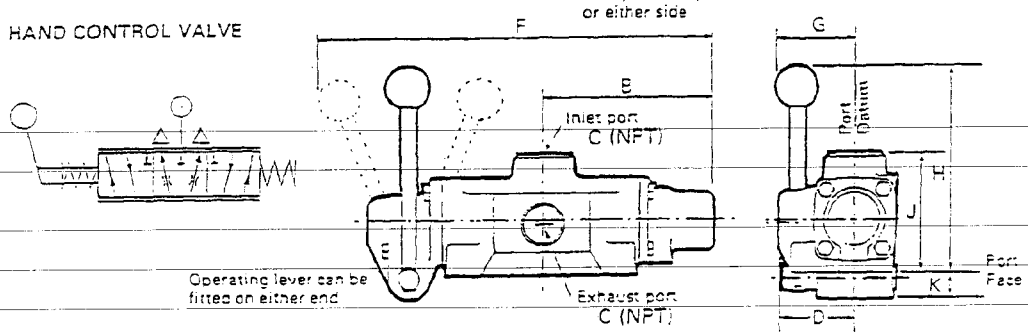


| MOTOR | A | B | C (NPT) | D | E | F | G | H | J | K |
|---|---|---|---|---|---|---|---|---|---|---|
| 050 & 110 | 8.3 | 4.65 | ½" | 2.4 | 3.3 | 10.6 | 2.4 | 6.4 | 3.3 | 0.83 |
| 210 | 8.3 | 4.65 | ¾" | 2.4 | 3.3 | 10.6 | 2.4 | 6.4 | 3.3 | 0.83 |
| 310 | 11.0 | 6.3 | 1" | 2.8 | 4.1 | 14.4 | 3.0 | 7.6 | 4.1 | 1.1 |
| 410 | 11.0 | 6.3 | 1¼" | 2.8 | 4.5 | 14.4 | 3.0 | 7.8 | 4.4 | 0.9 |
| 510 | 14.0 | 7.8 | 1½" | 3.8 | 5.4 | 16.3 | 3.4 | 7.5 | 5.4 | 1.1 |
| 610 | CONSULT FENNER FLUID POWER | | | | | | | | | |



Confidential Treatment Requested by Transocean Holdings LLC TRN-HCEC-00002150

CONFIDENTIAL TRN-MDL-00043887

# Valve Options

This range of bolt on valves offers very sensitive speed and directional control. One basic control spool and body assembly is offered with three alternative means of actuation.

CONFIGURATION

As standard these valves can be supplied with either EQUAL POWER OR BIASED POWER spools, the latter is suitable for hoisting applications (normal power for lifting - reduced power for lowering).

The direction of reduced power must be stated when ordering CW or CCW, when viewed on the output shaft of the motor or geared motor.

1. REMOTELY CONTROLLED (RCV) - This option is usually controlled from a remote position by one of the P.C. series or LC2 units shown opposite. A variable air pilot signal is applied to either end of the valve spool, depending on the required direction of motor rotation. The pilot pressure range is between 20 psi (1.4 bar) and 70 psi (4.8 bar), increased pilot pressure gives increased speed. The valve is spring centered to neutral.

2. HAND CONTROLLED (HCV) - The control valve spool is operated directly by a lever mechanism. Speed increase is obtained as the lever is moved in either direction from the center (neutral) position.

3. CORD CONTROLLED (CCV) - This is a variant of the HCV with a facility for operating with drop cords for hoists or crane applications.

PRESSURE DROP - Minimum pressure drop will be experienced through the valves, having the effect of maintaining the output torque while reducing the motor output speed by approximately 10% at 90 psi (6 bar) at maximum power. The starting torque remains unaffected.

REMOTE CONTROL VALVE

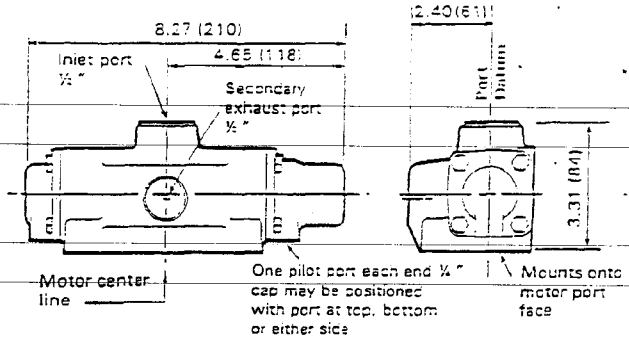


HAND CONTROL VALVE

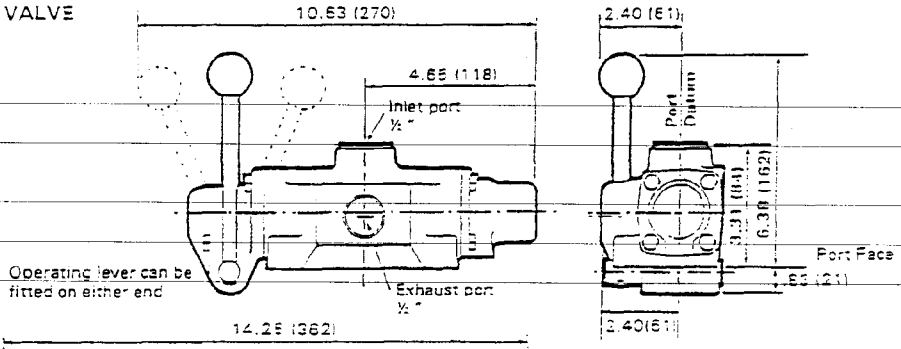


All dimensions in inches (mm)

CORD CONTROL VALVE

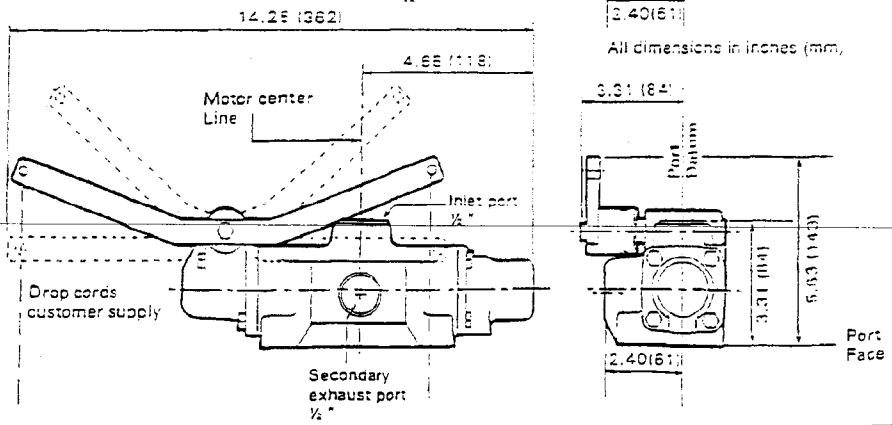




Confidential Treatment Requested by Transocean Holdings LLC TRN-HCEC-00002151

CONFIDENTIAL TRN-MDL-00043888

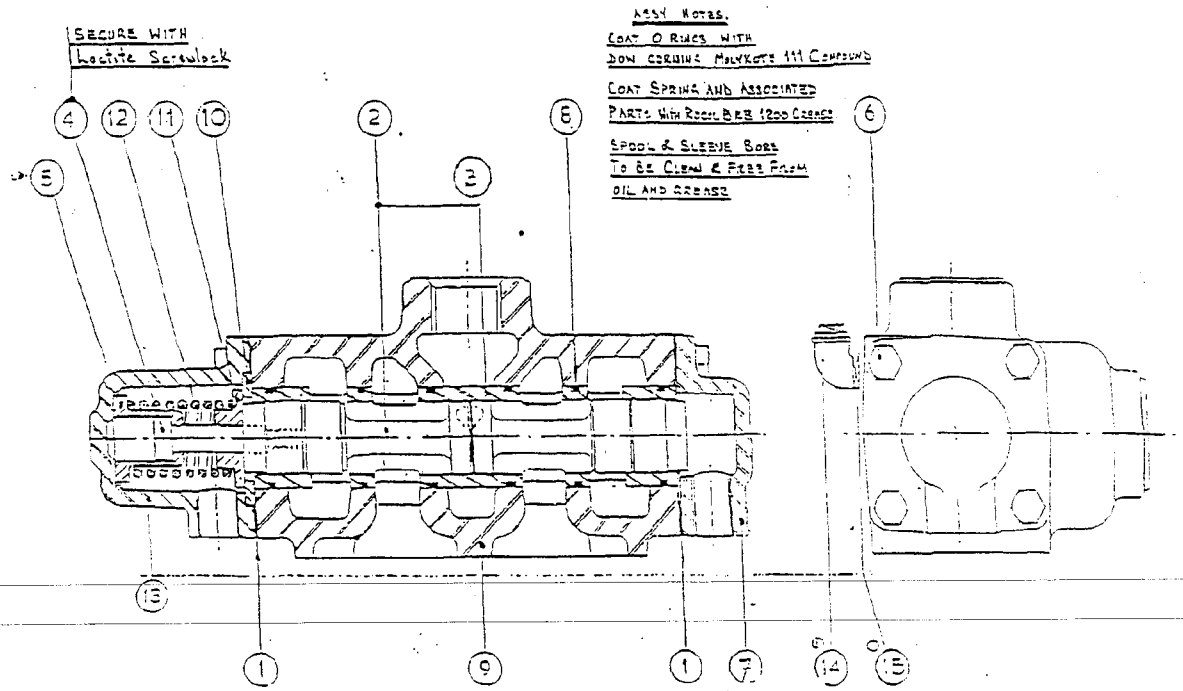


| ITEM | DESCRIPTION | RCV 110 EQUAL POWER PART NO. | QTY | RCV 210 EQUAL POWER PART NO. | QTY | RCV 310 EQUAL POWER PART NO. | QTY | RCV 410 EQUAL POWER PART NO. | QTY | RCV 510 EQUAL POWER PART NO. | QTY |
|---|---|---|---|---|---|---|---|---|---|---|---|
| 1 | END CAP GASKET | 111-066 | 2 | 111-066 | 2 | 311-066 | 2 | 311-066 | 2 | 521-066 | 2 |
| 2 | VALVE SPOOL | | | | | | | | | | |
| 3 | & SLEEVE ASSY | 111-913 | 1 | 221-913 | 1 | 321-913 | 1 | 431-913 | 1 | 521-913 | 1 |
| 4 | SHOULDER SCREW | 817-003 | 1 | 817-003 | 1 | 817-002 | 1 | 817-002 | 1 | 817-002 | 1 |
| 5 | SHAFT GUIDE | 111-071 | 1 | 111-071 | 1 | 311-071 | 1 | 311-071 | 1 | 521-071 | 1 |
| 6 | HEX BOLT | 802-016 | 8 | 802-016 | 8 | 802-032 | 8 | 802-032 | 8 | 802-033 | 8 |
| 7 | END CAP-PLAIN | 111-065 | 1 | 111-065 | 1 | 311-065 | 1 | 311-065 | 1 | 521-065 | 1 |
| 8 | O'RING | 808-027 | 6 | 808-027 | 6 | 808-010 | 6 | 808-010 | 6 | 808-013 | 6 |
| 9 | VALVE BODY | 111-060 | 1 | 221-060 | 1 | 321-060 | 1 | 431-060 | 1 | 521-060 | 1 |
| 10 | SPACER | 111-068 | 1 | 111-068 | 1 | 311-068 | 1 | 311-068 | 1 | 521-068 | 1 |
| 11 | WASHER | 111-072 | 1 | 111-072 | 1 | 311-072 | 1 | 311-072 | 1 | 521-072 | 1 |
| 12 | SPRING | 814-017 | 1 | 814-017 | 1 | 311-073 | 1 | 311-073 | 1 | 814-019 | 1 |
| 13 | END CAP-SPRING | 111-064 | 1 | 111-064 | 1 | 311-064 | 1 | 311-064 | 1 | 521-064 | 1 |
| 14 | ELBOW | 816-049 | 1 | 816-049 | 1 | 816-048 | 1 | 816-048 | 1 | 816-048 | 1 |
| 15 | PLUG | 816-053 | 3 | 816-063 | 3 | 816-061 | 3 | 816-061 | 3 | 816-061 | 3 |

RCV SEAL KITS

100-910 RCV 110/210
300-910 RCV 310/410
500-910 RCV 510

PISTON MOTOR/BRAKE CONNECTION TO RCV, HCV, CCV

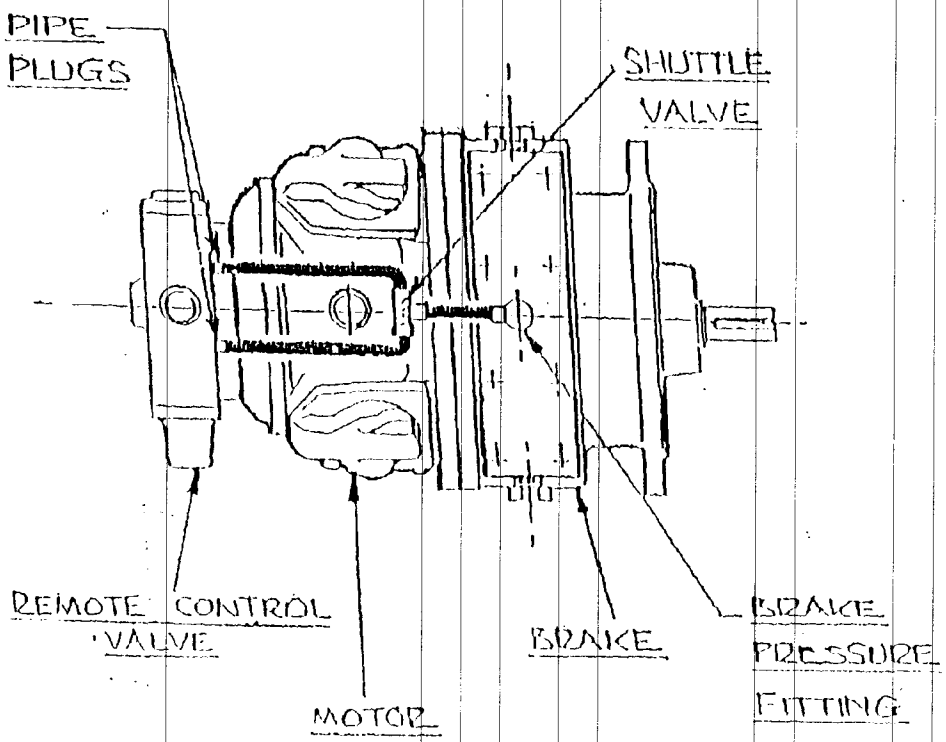


BRAKE CONNECTIONS

1. Remove two 1/8 pipe plugs located at rear of Remote Control Valve.

2. Using either 5/16 O/D flexible or rigid tube, and suitable compression fittings connect shuttle valve to RCV as shown.

3. Connect brake pressure inlet fitting to remaining port on shuttle valve.

4. When air pressure is applied to either side of the RCV the brake will be released.

**Fenner**
**Fluid Power**

5885 11th Street, Rockford, IL 61109-3699, USA

Confidential Treatment Requested by Transocean Holdings LLC
TRN-HCEC-00002153
CONFIDENTIAL
TRN-MDL-00043890

nfidential Treatment Requested by Transocean Holdings LLC



CONFIDENTIAL

## APPENDIX 5

*Hot Line Hose Reel*
COMPONENT DESCRIPTION

*Reference Item No.:* 3**

*Quantity Required:* 1 per reel

*Description:* Sprocket (Level Wind Lead Screw)

*Manufacturer:* Patco Machine & Fab., Inc.

*Part Number:* B41514

*Source:* Houston, Texas

Patco Machine & Fab., Inc.
2002 Humble Westfield
Houston, Texas 77073-2510

Telephone: 281-443-2837
Telefax: 281-443-1319

Manufacturer

Patco Machine & Fab., Inc.
2002 Humble Westfield
Houston, Texas 77073-2510

Telephone: 281-443-2837
Telefax: 281-443-1319



Confidential Treatment Requested by Transocean Holdings LLC TRN-HCEC-00002155

CONFIDENTIAL TRN-MDL-00043892

| ITEM | QTY | DWG No | DESCRIPTION | WT |
|---|---|---|---|---|
| 1 | 1 | - | SPROCKET, MARTIN #40A40 R.S.E. | 2.2 |
| 2 | 1 | B41515 | LEVEL WIND SPROCKET HUB DETAIL | .5 |
| 3 | 1 | B41516 | LEVEL WIND CLUTCH SPROCKET BUSHING | .2 |

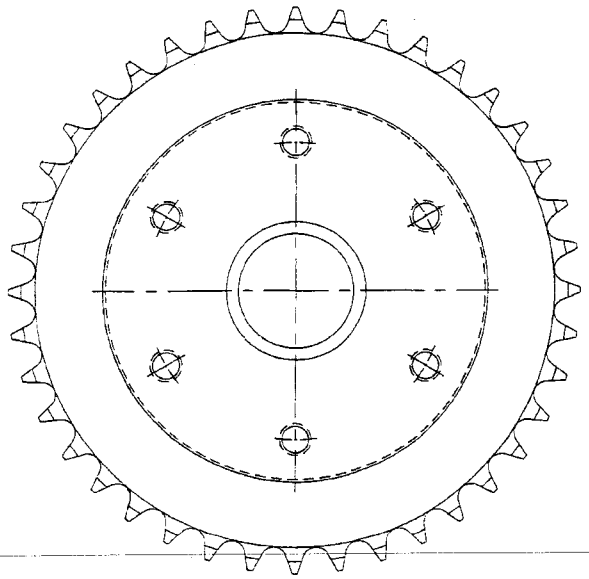

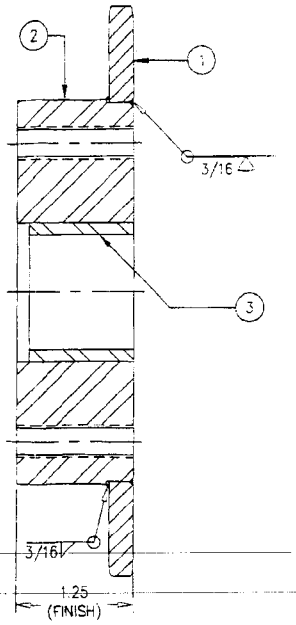


NOTES:
1) ALL WELDS TO BE FREE OF PINHOLES, UNDERCUTS, WELD SLAG AND SPATTER.
2) UNLESS NOTED SIZE OF WELD TO BE EQUAL TO THE THICKNESS OF THE SMALLER BASE METAL TO BE JOINED.
3) TYPE OF WELD IS DETERMINED BY THE TYPE OF JOINT.
4) WELDS TO BE ALL AROUND, SEAL WELD.
5) ESTIMATED WEIGHT = 8 LBS.
6) PRESS FIT ITEM #3 INTO ITEM #2.
7) ALL DIMENSIONS ARE IN INCHES UNLESS OTHERWISE SPECIFIED.

BLUE & YELLOW REELS

NOTICE: PROPRIETARY RIGHTS
THIS DOCUMENT AND ALL ACCOMPANYING INFORMATION AND DATA ARE AND REMAIN THE PROPERTY OF PATCO MACHINE & FAB., INC. AND ARE NOT TO BE COPIED, REDUPLICATED, REPRODUCED, NOR TRANSMITTED OR DISCLOSED TO OTHERS WITHOUT EXPRESS PERMISSION AND ARE TO BE RETURNED UPON REQUEST. THROUGHOUT, ALL RIGHTS IN PROPRIETARY AND NOVEL FEATURES OF THE SUBJECT MATTER ARE EXPRESSLY RESERVED BY PATCO MACHINE & FAB., INC. RECIPIENT'S AGREEMENT TO THE FOREGOING IS INDICATED BY ACCEPTANCE.

| REV | DESCRIPTION | DATE | DRAWN BY | CHECKED BY | ENGINEERING | MANUFACTURING | QUALITY ASSURANCE | DESIGN ACTIVITY |
|---|---|---|---|---|---|---|---|---|
| 2 | ADD | 02/25/92 | | | | | | |
| 1 | REV. BY DRN. DATE | | | | | | | |

TOLERANCE UNLESS OTHERWISE SPECIFIED: .X ±.1; .XX ±.03; .XXX ±.015; ANGLES ±; 125/

SURFACE TREATMENT

MATERIAL & HEAT TREAT

APPROVED

DO NOT SCALE

DRAWN BY: G. MARTINEZ 11/05/97
CHECKED: DENNIS DION 12/29/97
ENGINEER: H. E. K. 12/29/97

PATCO MACHINE & FAB., INC.
3000 BAILEY RECEIVER, VICKERY, TEXAS 75093
PH: (281) 442-3557 FAX: (281) 442-1291

CABLE / HOSE REEL
40A40 SPROCKET MODIFICATION

SIZE B SHEET 1 OF 1 DWG No. B41514 REV. 2

02-25-92 08:03:31

## APPENDIX 6A

*Hot Line Hose Reel*
COMPONENT DESCRIPTION

*Reference Item No.:* 4*

*Quantity Required:* 1 per reel

*Description:* Air Silencer

*Manufacturer:* Allied Witan

*Part Number:* 0383010, 1" MNPT

*Source:* Houston, Texas

Automation Engineering Co.
P.O. Box 40062
7025 Tidwell Road
Houston, Texas 77240

Telephone: 713-460-2137
Telefax: 713-460-0502

Manufacturer

Allied Witan Company
13805 Progress Parkway
Cleveland, Ohio 44133

Telephone: 216-237-9680
Telefax: 216-237-9633



Confidential Treatment Requested by Transocean Holdings LLC TRN-HCEC-00002158

CONFIDENTIAL TRN-MDL-00043895

## APPENDIX 6B

*Hot Line Hose Reel*
COMPONENT DESCRIPTION

*Reference Item No.:* 5*

*Quantity Required:* 1 per reel

*Description:* Air Silencer

*Manufacturer:* Allied Witan

*Part Number:* 0383012, 1 1/4" MNPT

*Source:* Houston, Texas

Automation Engineering Co.
P.O. Box 40062
7025 Tidwell Road
Houston, Texas 77240

Telephone: 713-460-2137
Telefax: 713-460-0502

Manufacturer

Allied Witan Company
13805 Progress Parkway
Cleveland, Ohio 44133

Telephone: 216-237-9680
Telefax: 216-237-9633



Confidential Treatment Requested by Transocean Holdings LLC TRN-HCEC-00002159

CONFIDENTIAL TRN-MDL-00043896

# noise control

DIRECTORY

ALLIED WITAN COMPANY

## AIR EXHAUST MUFFLERS

FOR:

Cylinders
Motors
Valves
Tool
Vacuum Pumps
Air Operated
Devices
Speed Control
Parts Blower
Steam

ALLIED WITAN CO.

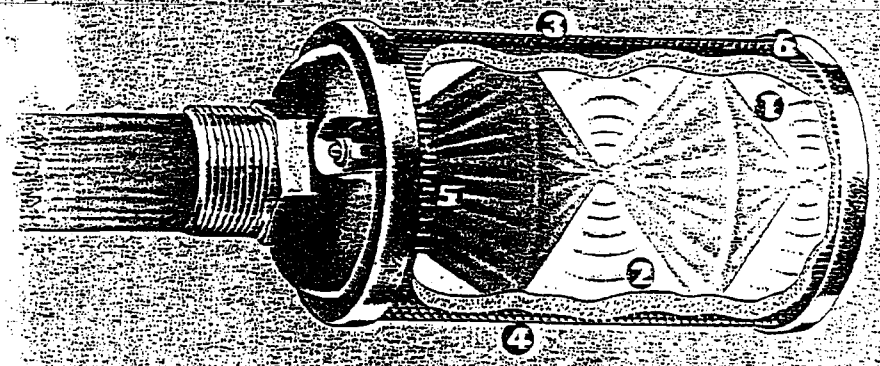

## ADVANTAGES

1. Noise cancelled by interposing sound waves.
2. Multiple stage velocity deceleration.
3. Disseminator completely dissipates harmful exhaust blast.
4. Radial full-flow design.
5. Obstruction free expansion chamber.
6. Capacious peripheral exhaust surface diffuses air blast, lowers velocity and reduces noise.

# The Allied Witan Atomuffler Design for Noise Control —Stops Noise Before It Starts

Kill the air blast that causes it and you completely prevent the deafening roar of air exhaust noise—before it even starts. Furthermore, let the air stream literally destroy itself—by effectively dividing and turning it back upon itself. This, with no need for baffles, packing or screening, is the basic principle of the Allied Witan Atomuffler system of air exhaust noise control.

As it enters the muffler at high velocity, the air exhaust mass is effectively redirected and subdivided into separate, infinitely smaller air streams. Directed in a continuous stream at the wall of the obstruction-free expansion chamber, they rebound freely to collide head-on with opposing air streams of equal force at a point pre-determined by the design of the muffler.

At the greatly reduced velocity thus effected, the air is then softly dispersed through the openings in the large area disseminator surface provided by the perforated cylinder wall of the muffler . . . free of noise, with negligible impairment of mechanical efficiency and with complete protection to personnel from injurious air blast.

With the proved ability to eliminate deafening, nerve-wracking air exhaust noise, the Allied Witan Atomuffler Design for Noise Control has for many years been widely utilized in thousands of plants for providing better, more pleasant working conditions, for safety, and for protecting and insuring the physical well-fare of employees.

With sound intensity attenuations as high as 10⁴, documented by qualified sound engineers, Allied Witan Air Exhaust Mufflers will more than meet the requirements for satisfactory reduction of noise levels—whether it be for already established shop practice, or pending regulatory legislation.



Confidential Treatment Requested by Transocean Holdings LLC TRN-HCEC-00002161

CONFIDENTIAL TRN-MDL-00043898

# PERFORMANCE DATA

Atomuffler has set the industry standards for years in sound control applications the world over and are now setting the pace in space. Witness the fact that Atomuffler is specified on missile projects where no compromise can be made on efficiency, dependability or performance. Not only does the Atomuffler possess superior sound silencing properties but its value as an air diffuser is unsurpassed in the muffler field. Air diffusion positively prevents troublesome air flow and dangerous after-blasts.

The Atomuffler's unique patented system is a new approach to sound control and is uncomplicated in use and installation and widely recommended by leading casualty insurance companies and safety engineers throughout the world.

You can be confident of getting the ultimate in noise reduction, advanced muffler design, exceptional service and economy when you specify Atomuffler.

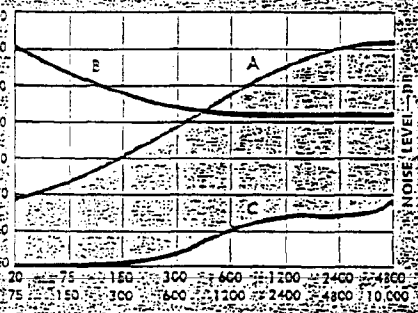


Frequency Band Noise and Attenuated Levels (Decibels)—Curve A—noise level when exhaust air is discharged directly into atmosphere without a muffler (note—noise level in the higher frequency bands exceeds accepted danger level, Curve B).

Curve B—Injurious noise level. Prolonged exposure to noise exceeding this level can result in progressive hearing loss.

Curve C—Attenuated level when ATOMUFFLER is attached to the exhaust opening of air equipment.

Shaded area illustrates the effective elimination of air exhaust noise with an Atomuffler used on air-operated equipment.

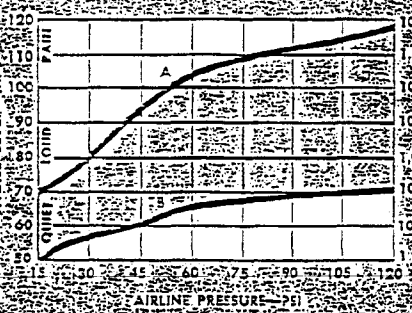


Noise Level and Attenuated Level (At Various Air Line Pressures)—Curve A—noise level when exhaust air is discharged directly into atmosphere without a muffler.

Curve B—attenuated level when ATOMUFFLER is attached to the exhaust opening of the equipment.

Shaded area illustrates the effective elimination of air exhaust noise with an ATOMUFFLER used on air-operated equipment.

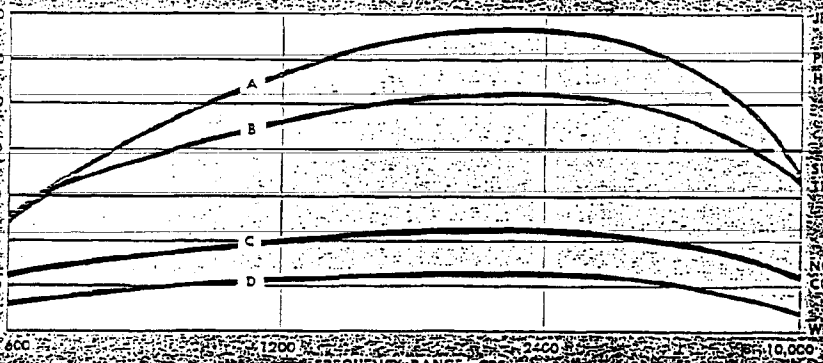


## FACTS ABOUT NOISE

Curve A—magnitude of loudness when exhaust air is discharged directly into atmosphere without a muffler.

Curve B—Exposure to noise above this level is difficult to endure, hearing loss can result from continuous exposure, protection required.

Curve C—Exposure to noise above this level causes fatigue, poor efficiency and costly errors, protection recommended.

Curve D—attenuated level when ATOMUFFLER is attached to the exhaust opening of the equipment.

Shaded area illustrates the effective elimination of air exhaust noise with an ATOMUFFLER used on air-operated equipment.

This graph was prepared to show exhaust noise loudness in sones ranging from loud to soft as distinguished by the human ear. In defining loudness sones differ from decibels in that a decibel is a numerical value indicating intensity of noise whereas sones indicate the actual loudness as heard by the human ear.



Confidential Treatment Requested by Transocean Holdings LLC TRN-HCEC-00002162

CONFIDENTIAL TRN-MDL-00043899

# Air Exhaust Muffler

## EP TYPE—SINGLE CHAMBER

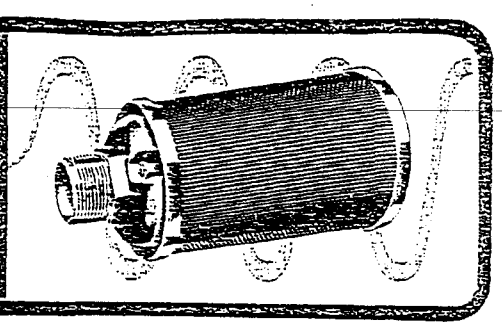

. . . WITH THE ALLIED WITAN ATOMUFFLER DESIGN FOR NOISE CONTROL

*Stops Noise Before it Starts*

Description—Page 1 Noise Control Data—Page 2

Thoroughly proved by years of use in thousands of plants, Atomuffler EP Type Air Exhaust Mufflers more than meet all requirements for the effective control of air exhaust noise from air cylinders, valves, tools, hoists, clutches and other air operated devices—with negligible impairment of operating efficiencies.

Like all Allied Witan Atomufflers, the EP Type Muffler is constructed with an expansion chamber completely free of obstructions, from which the exhaust air, at reduced velocity, is softly dispersed through the openings of the perforated cylinder wall of the muffler—free of noise and providing complete protection to personnel from injurious air blast noise.

Constructed entirely of corrosion resistant material for maintenance-free performance, EP Type Mufflers are supplied with standard male pipe thread connections for quick, easy attachment to the air exhaust port. Unit should be mounted in a protective position, free from excess vibration. Use wrench on Hex head to tighten unit to the device.

Epoxy Coated Covers, SST Fastener

[illegible]

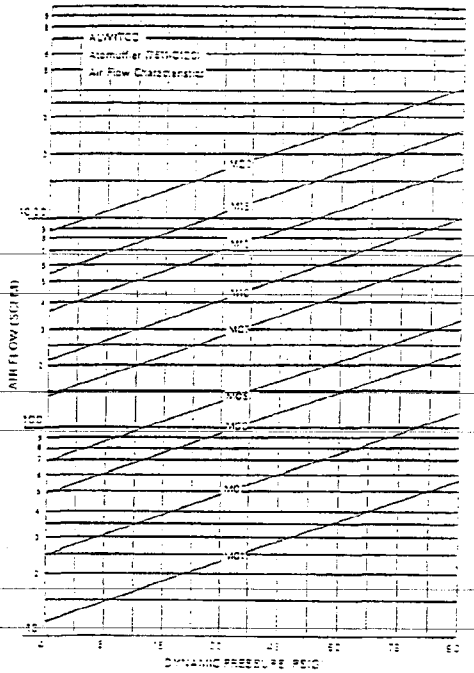


## EP TYPE 4-44 SERIES SPECIFICATIONS

| Model | M01 | M02 | M00 | M05 | M07 | M10 | M12 | M15 | M20 |
|---|---|---|---|---|---|---|---|---|---|
| A | ½ | ¾ | ⅞ | ⅞ | ⅞ | 1 | 1¼ | 1½ | 2 |
| B | 1⅞ | 1⅞ | 2⅛ | 3½ | 3⅞ | 3⅞ | 3⅞ | 5⅛ | 5⅛ |
| C | 3 | 4 | 4¾ | 6½ | 6¾ | 8 | 8½ | 13½ | 18½ |
| D | 2½ | 3½ | 4¼ | 5 | 6⅛ | 7¼ | 7¼ | 12 | 17 |
| E | ⅜ | ⅜ | ½ | ½ | ⅝ | ⅝ | 1 | 1¼ | 1¼ |
| Wght./lb. | .25 | .31 | .50 | .62 | .75 | 1.0 | 1.0 | 4.0 | 5.0 |
| Exhaust Surface Area/IN² | 4.6 | 7.1 | 12.2 | 16.9 | 24.1 | 31.9 | 39.9 | 79.5 | 119.3 |

(All dimensions in inches)

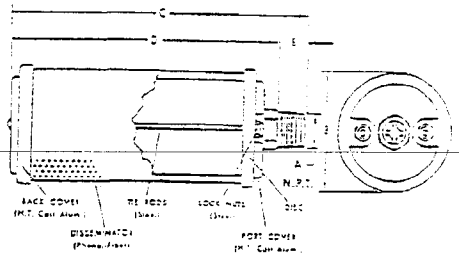


Patented



Confidential Treatment Requested by Transocean Holdings LLC TRN-HCEC-00002163

CONFIDENTIAL TRN-MDL-00043900

Confidential Treatment Requested by Transocean Holdings LLC TRN-HCEC-00002164

CONFIDENTIAL TRN-MDL-00043901

## APPENDIX 7

*Hot Line Hose Reel*
COMPONENT DESCRIPTION

*Reference Item No.:* 11

*Quantity Required:* 1 per reel

*Description:* Air Filter

*Manufacturer:* Norgren

*Part Number:* F17-800-A3DA, 1" FNPT

*Source:* Houston, Texas

Air-Dreco
1833 Joanna
Houston, Texas 77055

Telephone: 713-681-4601
Telefax: 713-681-1216

Manufacturer

C. A. Norgren Company
5400 South Delaware
Littleton, Colorado 80120-1663

Telephone: 303-794-2611
Telefax: 303-798-4856



Confidential Treatment Requested by Transocean Holdings LLC TRN-HCEC-00002165

CONFIDENTIAL TRN-MDL-00043902

# NORGREN Designer™ Series F08, F12 & F17
# General Purpose Compressed Air Filters

January 1990
Supersedes October 1984

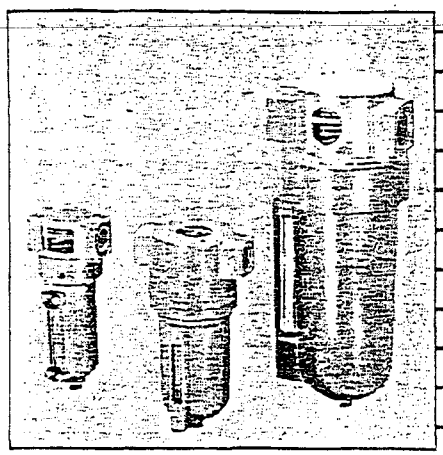

NORGREN Designer Series General Purpose Filters are used in compressed air systems to remove liquids and solid particles from the compressed air. Standard filters listed in the following table include a 50-micron filter element and PTF port threads. Options include a service life indicator that turns from green to red when the element needs to be cleaned or replaced, 5 and 75-micron elements, metal bowl without sight glass, 3-ounce polycarbonate bowl, and ISO G port threads.

## Ordering Information

MODEL NUMBERS

| | | AUTOMATIC DRAIN & 50-MICRON ELEMENT | | | MANUAL DRAIN & 50-MICRON ELEMENT | | |
|---|---|---|---|---|---|---|---|
| Type | Port Size PTF | Metal Bowl With Sight Glass | Transparent Polycarbonate Bowl | Transparent Polycarbonate Bowl With Guard | Metal Bowl With Sight Glass | Transparent Polycarbonate Bowl | Transparent Polycarbonate Bowl With Guard |
| F08 | 1/4 | F08-200-A3DA | F08-200-A3TA | – | F08-200-M3DA | F08-200-M3TA | – |
| | 3/8 | F08-300-A3DA | F08-300-A3TA | – | F08-300-M3DA | F08-300-M3TA | – |
| | 1/2 | F08-400-A3DA | F08-400-A3TA | – | F08-400-M3DA | F08-400-M3TA | – |
| F12 | | F12 IS OBSOLETE. REPLACED WITH F74G. SEE NORGREN CATALOG NCA-33. | | | | | |
| F17 | 3/4 | F17-600-A3DA | – | – | F17-600-M3DA | – | – |
| | 1 | F17-800-A3DA | – | – | F17-800-M3DA | – | – |
| | 1-1/4 | F17-A00-A3DA | – | – | F17-A00-M3DA | – | – |
| | 1-1/2 | F17-B00-A3DA | – | – | F17-B00-M3DA | – | – |

## Features

- Removes liquid and solid contaminants to protect air tools and other equipment.
- Screw-on bowl reduces maintenance time.
- Cleanable depth-type element has extra large surface area for long service life.
- Can be disassembled for cleaning without the use of tools or removal from air line.
- Choice of automatic or manual drain. Use automatic drain models if filter will be installed in an inaccessible area and when large quantities of water are present. Automatic drain operates when liquid accumulates above a certain level.
- Optional models with a service life indicator are available. The indicator turns from green to red when the element needs to be cleaned or replaced.
- The F08 is available as a modular unit without port threads. See NORGREN Publication NCA-12 for complete information.

## Options

Note the model number in the order table that comes closest to the desired filter. Change the model number as shown in the following diagram to obtain the desired option.

Position in Model Number

| 1 | 2 | 3 | | 4 | 5 | 6 | | 7 | 8 | 9 | 10 |
|---|---|---|---|---|---|---|---|---|---|---|---|
| F | X | X | – | X | X | X | – | X | X | X | X |

- 1 — Service life indicator.
- 1 — 5-micron element.
- 4 — 75-micron element (F12 & F17 only).
- M — Metal bowl without sight glass (F12 & F17 only).
- B — 3-ounce polycarbonate bowl (F08 only).
- G — ISO G ports. Not available on F12 Filters with 3/4" ports or F17 with 1-1/2" ports.

## Accessories

Wall Mounting Brackets:
F08: 3785-52
F12: 5502-04
F17: 6212-50 (3/4" & 1/2" Ports)
6212-51 (1-1/4" Ports)

Panel Mounted Service Life Indicator: 18-000-025

Filter Mounted Service Life Indicator Field Conversion Kit (F08 Only): 5796-40

F12 Bowl Guard for Transparent Bowl: 5270-50

## Repair Kits

| | F08 | F12 | F17 |
|---|---|---|---|
| O-Rings & Gaskets | 3160-05 | 3019-09 | 5578-05 |
| 5-micron Element | 3161-18 | 2992-18 | 5311-01 |
| 50-micron Element | 3161-18 | 2992-20 | 5311-03 |
| 75-micron Element | — | 3793-01 | 5656-01 |
| Metal Bowl Sight Glass | 2273-20 | 2273-08 | 2273-15 |

NORGREN

© NORGREN 1990

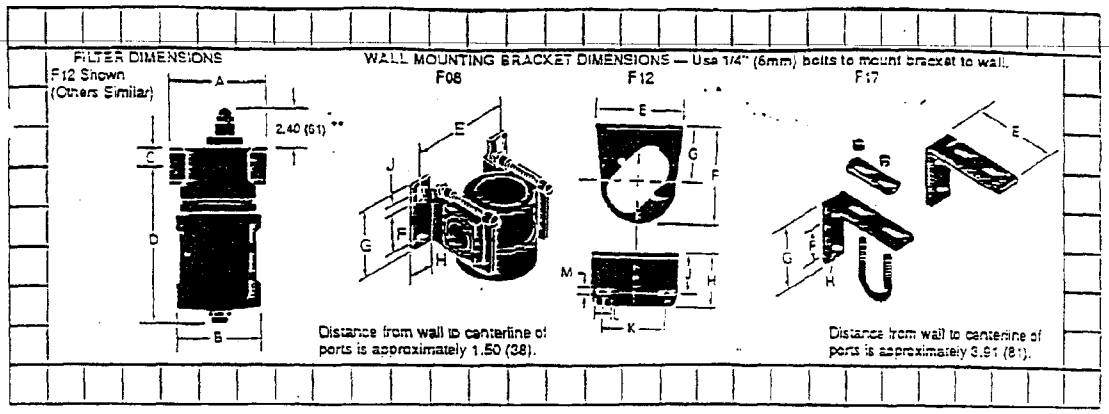


Dimensions — All Dimensions In Inches (mm).

| Type | A | B Max. Dia. | C | D Auto. Drain | D Man. Drain | E | F | G | H | J | K | L | M |
|---|---|---|---|---|---|---|---|---|---|---|---|---|---|
| F08 | 2.75 (70) | 2.58 (65) | 0.67 (17) | 5.70 (145) | 6.08 (154) | 3.56 (90) | 1.50 (38) | 2.40 (61) | 0.27 (6) Dia. | 0.25 (6) | — — | — — | — — |
| F12 | * | 3.50 (89) | 0.67 (17) | 6.31 (160) | 6.69 (170) | 3.50 (89) | 3.69 (94) | 2.06 (52) | 1.98 (50) | 1.50 (38) | 2.52 (64) | 0.64 (16) | 0.25 (7) |
| F17 | 4.75 (121) | 5.52 (140) | 1.25 (32) | 10.06 (256) | 10.44 (265) | 5.13 (130) | 1.69 (43) | 3.00 (76) | 0.34 (9) Dia. | — — | — — | — — | — — |

* 3.62 (92) on filters with 1/4" and 3/8" ports; 3.91 (99) on filters with 1/2" and 3/4" ports.
** Optional service life indicator.

## Specifications

Fluid: Compressed Air
Maximum Inlet Pressure:
- Transparent Bowl: 150 psig (10.3 bar)
- Metal Bowl 250 psig (17.2 bar)

Maximum Temperature:
- Transparent Bowl: 125°F (52°C)
- Metal Bowl 175°F (79°C)

Automatic Drain:
- Connection: 1/8" NPTF
- Minimum Operating Pressure: 10 psig (.69 bar). The drain is open when the filter is not pressurized and closes when the bowl is pressurized to approximately 5 psig.

*NOTE*

***Water vapor will pass through these filters and could condense into liquid form downstream as air temperature drops. Install a NORGREN air dryer if water condensation could have a detrimental effect on the application.***

## Materials of Construction

Body:
- F08 & F12: Zinc
- F17: Aluminum

Bowl:
- Transparent: Polycarbonate Plastic
- Metal:
  - F08 & F12: Zinc
  - F17: Aluminum

Metal Bowl Sight Glass: Pyrex
Elastomers: Neoprene and Nitrile
Filter Element:
- 5-, 25-, 50-micron:
  - F08 and F12: Porous Polypropylene
  - F17: Sintered Bronze
- 75-micron: Stainless Steel Screen

## Graphic Symbols

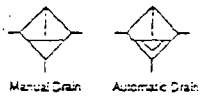

## Performance Curves

### F08 FILTER

FLUIDS: COMPRESSED AIR
FILTER ELEMENT: 50-MICRON
PORT SIZE: 3/8"

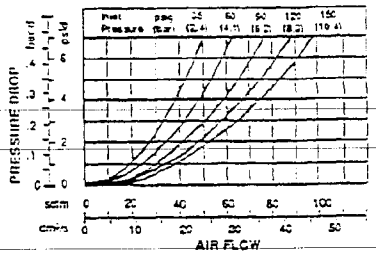


### F12 FILTER

FLUIDS: COMPRESSED AIR
FILTER ELEMENT: 50-MICRON
PORT SIZE: 1/2"

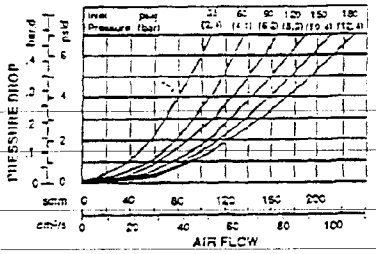


### F17 FILTER

FLUIDS: COMPRESSED AIR
FILTER ELEMENT: 50-MICRON
PORT SIZE: 1"

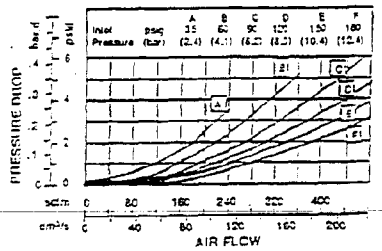


## Warning

These products are intended for use in industrial compressed air systems only. Do not use these products where pressures and temperatures can exceed those listed under **Specifications**.

Before using these products with fluids other than those specified, for nonindustrial applications, life-support systems, or other applications not within published specifications, consult NORGREN.

Through misuse, age, or malfunction, components used in fluid power systems can fail in various modes. The system designer is warned to consider the failure modes of all component parts used in fluid power systems and to provide adequate safeguards to prevent personal injury or damage to equipment in the event of such failure modes.

System designers must provide a warning to end users in the system instructional manual if protection against a failure mode cannot be adequately provided.

System designers and end users are cautioned to review specific warnings found in instruction sheets packed and shipped with these products.

It should be recognized that warnings are valid for any product, regardless of manufacturer, and are not restricted to products manufactured by NORGREN. NORGREN'S reputation for product quality and performance is well established. We feel we have the additional obligation to provide information or warnings to customers to assist them in applying our products in a reasonable and safe manner.

## Limited Warranty, Disclaimer & Limitation of Remedies

Items sold by NORGREN are warranted to be free from defects in materials and workmanship for a period of two years from the date of manufacture, provided said items are used according to NORGREN'S recommended usages. NORGREN'S liability is limited to the repair of, refund of purchase price paid for, or replacement in kind of, at NORGREN'S sole option, any items proved defective, provided the allegedly defective items are returned to NORGREN prepaid. The warranties expressed above are in lieu of and exclusive of all other warranties.

There are no other warranties, expressed or implied, except as stated herein. There are no implied warranties of merchantability or fitness for a particular purpose, which are specifically disclaimed. NORGREN'S liability for breach of warranty as herein stated is the exclusive remedy, and in no event shall NORGREN be liable or responsible for incidental or consequential damages, even if the possibility of such incidental or consequential damages has been made known to NORGREN.

NORGREN reserves the right to discontinue manufacture of any product or change product materials, design, or specifications without notice.


NORGREN
5400 South Delaware St. Littleton, CO 80120-1663
PHONE 303/794-2611 TELEX 4 55-1 INT. TELEX 45[illegible]
FAX 303/795-[illegible]
PRINTED IN U.S.A.


IMI

NO-126/1-90


Confidential Treatment Requested by Transocean Holdings LLC TRN-HCEC-00002168

CONFIDENTIAL TRN-MDL-00043905

# DESIGNER SERIES COMPRESSED AIR FILTERS

NP-126
February, 1984
Supersedes September, 1983

TYPE F11: BASIC 1/4"
TYPE F12: BASIC 1/2"
TYPE F17: BASIC 1"

- *1/4" THRU 1-1/2" PORTS*
- *MANUAL OR AUTOMATIC DRAIN*

## OPERATION

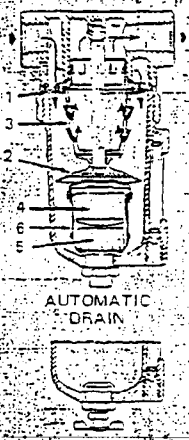


A filter is used in a compressed air system to remove most liquid and solid particles from the compressed air. Air entering the filter is guided into a swirling pattern by the louvers (1). Coarse solid particles and liquids are forced to the bowl wall by centrifugal force and drop to the bottom. Baffle (2) creates a quiet zone at the bottom of the bowl and prevents air turbulence from picking up liquids and returning them to the air stream. The air then passes thru the filter element (3) where most finer solid particles are retained.

A drain (manual or automatic) is provided to drain accumulated liquid. The liquid level must be maintained below baffle (2) or liquid will be carried downstream. The manual drain is a simple petcock at the bottom of the bowl. The automatic drain (4 and 5) is a float operated mechanism at the bottom of the bowl which automatically expels any liquid that accumulates above a certain level. An over-accumulation of liquid in the bottom of the bowl causes float (4) to rise. This admits bowl pressure into the drain mechanism (5), opening a bleed valve and allowing excess liquid to be expelled under pressure. When the liquid level drops sufficiently, the float drops and draining stops. A screen (6) traps large particles which would not pass thru the drain mechanism. The automatic drain is normally open when the filter is not pressurized and any liquid that collects drains by gravity. The automatic drain closes when the bowl is pressurized to approximately 5 psig. Minimum operating pressure is 10 psig for the automatic drain.

## WARNING

THESE UNITS ARE INTENDED FOR USE IN INDUSTRIAL COMPRESSED AIR SYSTEMS ONLY. THEY MUST NOT BE USED WHERE PRESSURE OR TEMPERATURE MAY EXCEED MAXIMUM RATED OPERATING CONDITIONS. SEE SPECIFICATIONS.

THE POLYCARBONATE PLASTIC BOWLS USED ON THESE UNITS CAN BE DAMAGED AND POSSIBLY BURST IF EXPOSED TO SUCH SUBSTANCES AS CERTAIN SOLVENTS, STRONG ALKALIES, COMPRESSOR OILS CONTAINING ESTER-BASED ADDITIVES OR SYNTHETIC OILS. FUMES OF THESE SUBSTANCES IN CONTACT WITH THE POLYCARBONATE BOWL, EXTERNALLY OR INTERNALLY, CAN ALSO RESULT IN DAMAGE. CLEAN WITH WARM WATER ONLY.

USE METAL BOWL IN APPLICATIONS WHERE A PLASTIC BOWL MIGHT BE EXPOSED TO SUBSTANCES THAT ARE INCOMPATIBLE WITH POLYCARBONATE.

BEFORE USING WITH FLUIDS OTHER THAN AIR, FOR NON-INDUSTRIAL APPLICATIONS, OR FOR LIFE SUPPORT SYSTEMS CONSULT C. A. NORGREN CO.

## SPECIFICATIONS

MAXIMUM RATED OPERATING CONDITIONS –
- Polycarbonate (Transparent) Bowl: 150 psig (10.3 bar); 125°F (52°C)
- Metal Bowl: 250 psig (17.2 bar); 175°F (79°C)

FLUID: Compressed Air
PORT SIZES –
- Type F11: 1/4", 3/8", or 1/2" FTF (G 1/4 or G 3/8 ISO optional)
- Type F12: 1/4", 3/8", 1/2" or 3/4" FTF (G 1/4, G 3/8 or G 1/2 ISO optional)
- Type F17: 3/4", 1", 1-1/4" or 1-1/2" FTF (G 3/4, G 1 or G 1-1/4 ISO optional)

DRAIN: Automatic with 1/8" NPTF connection or manual
FILTER ELEMENT: 50-micron (5, 25 or 75-micron optional)
BOWL: Metal with sight glass (Metal without sight glass and polycarbonate are optional. The F17 is not available with polycarbonate bowl.)
MATERIALS OF CONSTRUCTION –
- Body: Aluminum or Zinc on F11 and F12; Aluminum on F17
- Bowl –
  - Transparent: Polycarbonate Plastic
  - Metal: Aluminum or Zinc on F11 and F12; Aluminum on F17
- Sight Glass: Pyrex
- Elastomers: Neoprene and Buna-N
- Element –
  - 5, 25, 50-micron –
    - Type F11 and F12: Porous Polypropylene (Plastic)
    - Type F17: Sintered Bronze
  - 75-micron: Stainless Steel Screen

*NOTE –*

*These filters will remove most liquid and solid particles from the compressed air. Water vapor, however, will pass through the filter and could condense into liquid form downstream. Install an air dryer if water condensation will have a detrimental effect on the downstream application.*

## INSTALLATION

1. Air line piping should be same size as filter ports.
2. Install filter vertically (drain at bottom) in air line. Locate filter upstream of regulators and lubricators as near as possible to the air supply and away from any heat source.
3. Air flow must be in direction of arrow on top of body. Connect piping to proper ports using pipe thread sealant on male threads only. Do not allow sealant to enter interior of filter.
4. Automatic drains are ported 1/8" NPTF to allow piping away of expelled liquid. Use flexible tubing or nonrigid piping (1/8" minimum I.D.) for the drain line.
5. Before applying air pressure, position sight glass for best visibility (see step 6 of REASSEMBLY).

## SERVICING

Filters with manual drain must be drained as frequently as necessary to keep liquid level in bowl below baffle. If liquid level rises above the baffle, liquid will be carried downstream. Clean or replace filter element when plugged or dirty.

NORGREN®
LITTLETON, COLORADO

Confidential Treatment Requested by Transocean Holdings LLC TRN-HCEC-00002169

CONFIDENTIAL TRN-MDL-00043906

METAL BOWL WITH SIGHT GLASS (TYPE A)

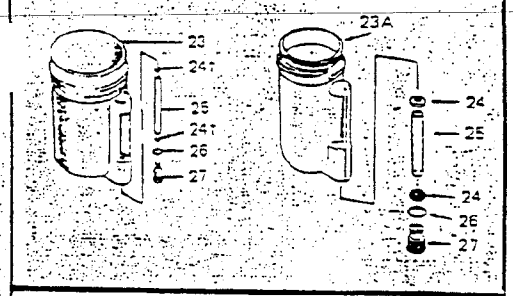


METAL BOWL WITH SIGHT GLASS (TYPE B)††

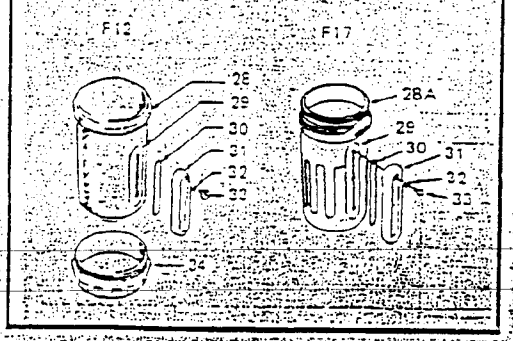


| | F11 | F12 | F17 |
|---|---|---|---|
| 5. Filter Elements | | | |
| 5-micron | 3161-13 | 2992-18 | 5311-01 |
| 25-micron | 3161-14 | 2992-19 | 5311-02 |
| 50-micron | 3161-15 | 2992-20 | 5311-03 |
| 75-micron screen | 5361-01 | 3793-01 | 5555-01 |
| 9. F11 & F12 Transparent Bowl | | | |
| With manual drain (items 9, 17 thru 20) | 3155-53 | 5229-50 | — |
| With auto drain (items 9, 13 thru 16) | 3154-58 | 5229-55 | — |
| 10. F17 Transparent Bowl | — | — | — |
| 11. Bowl Guard (items 11, 12) | 5176-02 | 5270-50 | — |
| 12. Retainer | 5177-87 | 5177-88 | — |
| 13. Auto Drain (items 13, 14, 15) | 3000-10 | 3000-10 | 3000-10 |
| 21. F11 & F12 Metal Bowl Without Sight Glass | | | |
| With manual drain (items 21, 17 thru 20) | 3201-51 | 5400-51 | — |
| With standard auto drain (items 21, 13 thru 16) | 3201-52 | 5400-53 | — |
| 22. F17 Metal Bowl Without Sight Glass | | | |
| With manual drain (items 22, 17 thru 20) | — | — | 5390-65 |
| With auto drain (items 22, 13 thru 16) | — | — | 5390-66 |
| 23. F11 & F12 (Type A) Metal Bowl With Sight Glass | | | |
| With manual drain (items 17 thru 20, 23 thru 27) | 3200-51 | 5560-51 | — |
| With auto drain (items 13 thru 16, 23 thru 27) | 3200-52 | 5560-52 | — |
| 23A. F17 (Type A) Metal Bowl With Sight Glass | | | |
| With manual drain (items 17 thru 20, 23A thru 27) | — | — | 5390-32 |
| With auto drain (items 13 thru 16, 23A thru 27) | — | — | 5390-33 |
| 28. F12 (Type B) Metal Bowl With Sight Glass | — | — | — |
| 28A. F17 (Type B) Metal Bowl With Sight Glass | — | — | †† |

| REPAIR KITS | F11 | F12 | F17 |
|---|---|---|---|
| Sight Glass (Type A) (items 24, 25, 26) | 2273-13 | 2273-08 | 2273-15 |
| Sight Glass (Type B) (items 29, 30, 31, 32) | — | 2272-06 | 2273-05 |
| O-rings & Gaskets (items 2, 6, 18). F12 kit also contains item 4. F17 kit also contains items 4 and 6 | 3163-01 | 3019-09 | 5578-05 |
| Element (5-micron – contains items 4 and 5) | — | 2992-09 | — |

| ACCESSORIES | F11 | F12 | F17 |
|---|---|---|---|
| | | 3/4" & 1" PORTS | 1-1/4" & 1-1/2" PORTS |
| Mounting Brackets | 5200-02 | 5832-04 | 6212-50 | 6212-51 |

## PARTS DESCRIPTION FOR EXPLODED VIEW

1. Body
2. O-ring
3. Louver
4. Gasket
5. Filter Element
6. Gasket
7. Baffle
8. O-ring
9. F11 & F12 Transparent Bowl
10. F17 Transparent Bowl*
11. Bowl Guard
12. Retainer
13. Auto Drain (items 13, 14, 15)
14. Float
15. Gasket
16. Nut
17. Insert
18. Gasket
19. Nut
20. Drain Petcock
21. F11 & F12 Metal Bowl Without Sight Glass
22. F17 Metal Bowl Without Sight Glass
23. F11 & F12 (Type A) Metal Bowl With Sight Glass
23A. F17 (Type A) Metal Bowl With Sight Glass
24. Seal (2 required)†
25. Gauge Glass
26. O-ring
27. Retainer
28. F12 (Type B) Metal Bowl With Sight Glass††
28A. F17 (Type B) Metal Bowl With Sight Glass††
29. Film
30. O-ring
31. Gauge Glass
32. O-ring (2 required for F12; 3 required for F17)
33. Screw (2 required for F12; 3 required for F17)
34. Retaining Ring

*Used with 5, 25, and 50-micron elements only.
Transparent bowl for F17 is no longer available. Order item 22 or 23A.
†Sight glass seals may be cup shaped (current models) or flat (previous models). These seals are not interchangeable. Cup shaped seals must be replaced with cup shaped seals, and flat seals with flat.
††These bowl assemblies are obsolete and are no longer available. Order item 23 or 23A.
†††Used with 5-micron element only.

Confidential Treatment Requested by Transocean Holdings LLC TRN-HCEC-00002170

CONFIDENTIAL TRN-MDL-00043907

1. Shut off inlet pressure and reduce pressure in bowl to zero. Filter may be disassembled without removal from air line.
2. On models equipped with polycarbonate bowl and bowl guard, rotate bowl guard (11) around body (1) to wind out bowl guard retainer (12) through slot in guard. Slide guard off body.
3. Disassemble the filter in accordance with the appropriate exploded view. DO NOT REMOVE CENTER POST FROM BODY, AS DAMAGE TO THREADS COULD RESULT.
4. Automatic drain assembly (13, 14) is a sealed unit. Replace if non-operative.

## CLEANING

1. Clean polycarbonate bowl using warm water only. Clean other parts using warm water and soap.
2. Dry parts and blow out internal passages in body (1) using clean, dry compressed air. Blow air through filter element (5) from inside to outside to dislodge surface contaminants. Replace filter element when plugged.
3. Inspect all parts carefully.
4. Replace damaged parts. If polycarbonate bowl shows signs of cracking or cloudiness, replace with a metal bowl.

## REASSEMBLY

1. Prior to reassembly, lubricate the following items:

| Item | Lubricant |
|---|---|
| 2, 8, 24, 25 (O-rings, seals) | Generous coat of Dow Corning 44 grease (or equivalent). |
| 21, 23, 34 (threads) | Small, even amount of Armite Laboratories anti-sieze compound Lea-Plate 250 (or equivalent). |

2. Assemble filter as shown on the appropriate exploded view.
3. Screw baffle (7) onto center post until initial contact is made with element, then tighten 1/4 to 1/2 turn.
4. Tighten drain retaining nut (16 or 19) to 20-to-25 inch-pounds torque.
5. Tighten retainer (27) to 7-to-10 inch-pounds torque (F11 and F12 filters) or to 17-to-20 inch-pounds (F17 filters).

WARNING
DO NOT OVERTORQUE RETAINER (27) AS DAMAGE TO GAUGE GLASS (25) CAN OCCUR.

6. Assemble the bowl to the body as described below.

| ITEM | PROCEDURE |
|---|---|
| 9, 21, 34 | Turn into body until stop (approximately 5 turns). |
| 10, 22, 23A, 23B | Turn into body until stop. Arrowhead on reservoir must be to right of arrowhead on body. |
| 23 | Turn into body until stop (approximately 5 turns), then unscrew no more than one full turn to position sight glass for best visibility. |

7. Reinstall guard (11), if so equipped, on body (1) with retainer head in guard in line with groove in body. Insert several inches of retainer (12) into body groove through slot in guard. Rotate guard around body to wind in retainer.

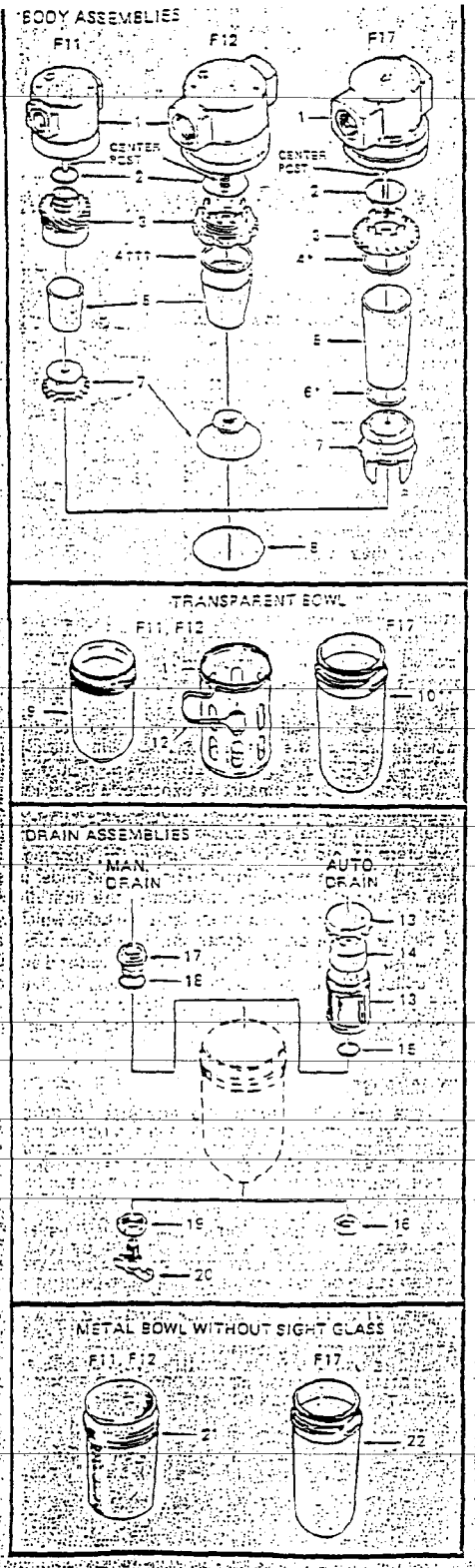

All dimensions in inches (millimeters).

| TYPE | INCHES (Millimeters) | | | | |
|---|---|---|---|---|---|
| | A | B MAX. DIA | C | D AUTO DRAIN | D MAN. DRAIN |
| F11 | 2.75 (70) | 2.86* (77) | .69 (18) | 5.46 (139) | 5.64 (143) |
| F12 | [illegible] | 3.50† (90) | .67 (17) | 6.31 (160) | 6.69 (170) |
| F17 | 4.75 (121) | 5.52 (140) | 1.25 (32) | 10.06 (255) | 10.44 (265) |

*3.62 (92) for 1/4" and 3/8" ports.
†3.91 (99) for 1/2" and 3/4" ports.

*2.86 (77) metal bowl with sight glass.
2.48 (63) plastic bowl with guard.
2.32 (59) plastic bowl.

†3.50 (90) metal bowl with sight glass.
3.16 (80) plastic bowl with guard.
3.01 (76) plastic bowl.

WALL MOUNTING BRACKETS

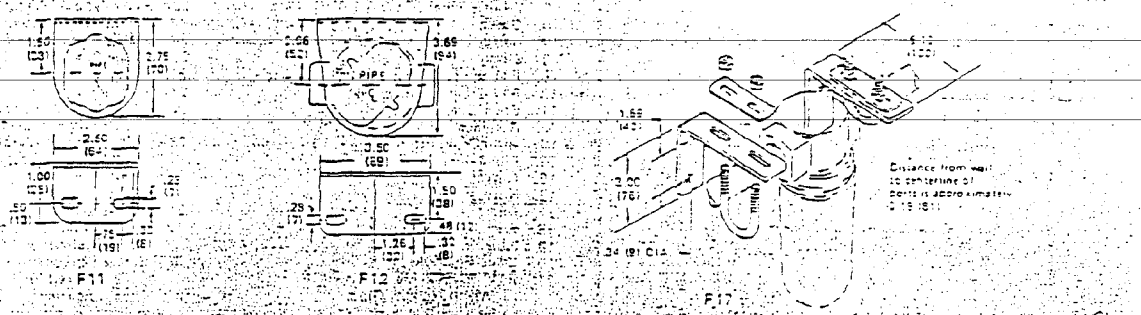


**C. A. NORGREN CO.**
LITTLETON, COLORADO 80120 / 303-794-2611
Printed in U.S.A.

NIP-1 26/2-84

## APPENDIX 8

*Hot Line Hose Reel*
COMPONENT DESCRIPTION

*Reference Item No.:* 12

*Quantity Required:* 1 per reel

*Description:* Air Regulator

*Manufacturer:* Norgren

*Part Number:* R17-800-RGLA, 1" FNPT

*Source:* Houston, Texas

Air-Dreco
1833 Joanna
Houston, Texas 77055

Telephone: 713-681-4601
Telefax: 713-681-1216

Manufacturer

C. A. Norgren Company
5400 South Delaware
Littleton, Colorado 80120-1663

Telephone: 303-794-2611
Telefax: 303-798-4856



Confidential Treatment Requested by Transocean Holdings LLC TRN-HCEC-00002174
CONFIDENTIAL TRN-MDL-00043911

# NORGREN Designer™ Series R08, R12 & R17 General Purpose Compressed Air Regulators

NC-272
January 1990
Supersedes November 1983

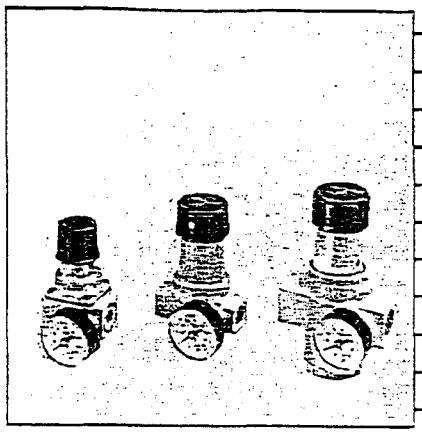

NORGREN Designer General Purpose Regulators are used in compressed air systems to reduce system pressure to a level which can be used to operate air tools and other air operated equipment, and to maintain the reduced pressure at a constant level despite changes in the inlet pressure and changes in downstream flow requirements. ***Standard regulators listed in the following table are relieving regulators with a pressure gauge and PTF threads.*** Options include T-handle adjustment, nonrelieving regulators, regulators without gauge, and ISO G threads.

## Ordering Information

| Type | Port Size PTF | MODEL NUMBERS Outlet Pressure Adjustment Range * 5 to 50 psig (0.3 to 3.5 bar) | 5 to 60 psig (0.3 to 4.1 bar) | 5 to 125 psig (0.3 to 8.6 bar) | 5 to 150 psig (0.3 to 10.4 bar) | 12 to 250 psig (1.0 to 17.2 bar) |
|---|---|---|---|---|---|---|
| R08 | 1/4 | — | R08-200-RGFA | — | R08-200-RGMA | R08-200-RGSA |
| | 3/8 | — | R08-300-RGFA | — | R08-300-RGMA | R08-300-RGSA |
| | 1/2 | — | R08-400-RGFA | — | R08-400-RGMA | R08-400-RGSA |
| R12 | R12 IS OBSOLETE. REPLACED WITH R74. SEE NORGREN CATALOG NCA-33. | | | | | |
| R17 | 3/4 | R17-600-RGEA | — | R17-600-RGLA | — | R17-600-RGSA |
| | 1 | R17-800-RGEA | — | R17-800-RGLA | — | R17-800-RGSA |
| | 1-1/4 | R17-A00-RGEA | — | R17-A00-RGLA | — | R17-A00-RGSA |
| | 1-1/2 | R17-E00-RGEA | — | R17-E00-RGLA | — | R17-E00-RGSA |

* Outlet pressure adjustment ranges are not minimum or maximum pressure limits. Regulators can be adjusted to zero psig outlet pressure and, generally, to pressures in excess of those specified. The use of these regulators to control pressures outside of the specified ranges is not recommended.

### Features

- Accurate and quick response to flow demands and line pressure changes.
- Low torque non-rising pressure adjustment knob provides easy hand adjustment at any pressure. The knob has an integral locking device which can be made tamper resistant by the addition of an optional seal wire.
- Balanced valve minimizes effect of variations in inlet pressure on the outlet pressure.
- Standard relieving models allow reduction of outlet pressure even when the system is dead-ended.
- Full flow gauge ports.
- Easily disassembled for servicing without removal from air line.
- The R08 is available as a modular unit without port threads. See NORGREN Publication NCA-12 for information.

### Options

Note the model number in the order table that comes closest to the desired regulator. Change the model number as shown in the following diagram to obtain the desired option.

Position in Model Number

| 1 | 2 | 3 | | 4 | 5 | 6 | | 7 | 8 | 9 | 10 |
|---|---|---|---|---|---|---|---|---|---|---|---|
| R | X | X | – | X | X | X | – | X | X | X | X |

- 1 — T-handle adjustment.
- N — Nonrelieving regulator.
- N — Regulator without gauge.
- G — ISO G ports. Not available on R12 Regulators with 3/4" ports or R17 with 1-1/2" ports.

### Accessories

| | R08 | R12 | R17 |
|---|---|---|---|
| Mounting Bracket & Panel Nut | 5203-06 | 5514-06 | 5570-04 |
| Plastic Panel Nut | 5191-89 | 5225-89 | 5225-89 |
| Metal Panel Nut | 5191-88 | 5225-97 | 5225-97 |
| Tamper Resistant Seal Wire | 2117-02 | 2117-01 | 2117-01 |

### Repair Kits

| | R08 | R12 | R17 |
|---|---|---|---|
| O-rings, Valve Spring, Valve & Diaphragm Kit | | | |
| Relieving | 5296-14 | 5550-08 | 5578-02 |
| Nonrelieving | 5298-13 | 5550-07 | 5578-01 |

NORGREN

© NORGREN 1990

Confidential Treatment Requested by Transocean Holdings LLC TRN-HCEC-00002175

CONFIDENTIAL TRN-MDL-00043912

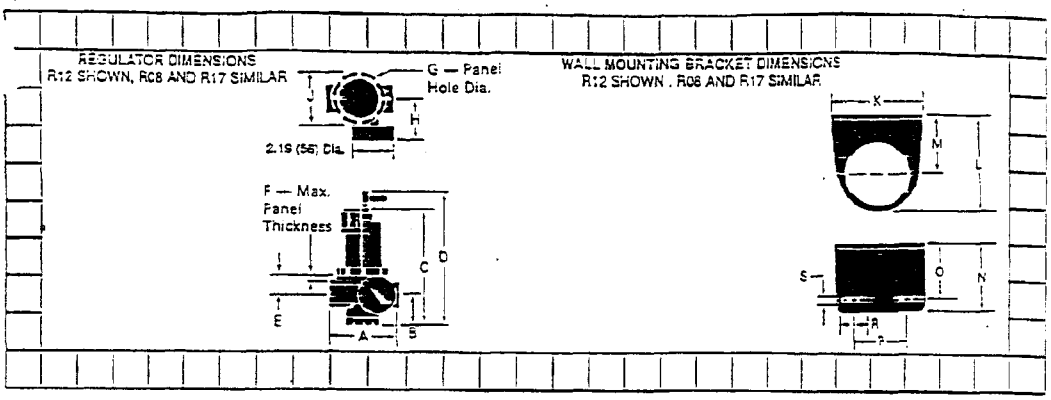


Technical Data

DIMENSIONS — ALL DIMENSIONS IN INCHES (MM)

| Type | A | B | C | D | E | F | G | H | J With Panel Nut | J Without Panel Nut | K | L | M | N | O | P | R | S |
|---|---|---|---|---|---|---|---|---|---|---|---|---|---|---|---|---|---|---|
| R08 | 2.75 (70) | 1.44 (37) | 5.12 (131) | 5.41 (137) | 2.22 (56) | 0.19 (5) | 1.89 (48) | 2.50 (64) | 2.25 (57) | 2.00 (51) | 2.50 (64) | 2.75 (70) | 1.50 (38) | 1.50 (38) | 1.00 (25) | 1.50 (38) | 0.68 (17) | 0.28 (7) |
| R12 | 3.50 (89) | 1.50 (38) | 5.88 (149) | 6.86 (174) | 0.72 (18) | 0.19 (5) | 2.28 (58) | 2.25 (57) | 2.65 (67) | 2.25 (57) | 3.50 (89) | 3.38 (86) | 2.06 (52) | 1.96 (50) | 1.51 (38) | 2.20 (56) | 0.94 (24) | 0.28 (7) |
| R7 | 4.25 (108) | 2.38 (60) | 7.09 (180) | 8.07 (205) | 1.22 (31) | 0.16 (4) | 2.28 (58) | 2.92 (74) | 2.65 (67) | 2.38 (60) | 3.50 (89) | 4.50 (114) | 3.19 (81) | 1.75 (44) | 1.19 (30) | 2.16 (54) | 1.06 (28) | 0.28 (7) |

## Specifications

Fluid: Compressed Air
Inlet Pressure: 300 psig (20.7 bar) maximum.
Temperature Range: 0° to 175°F (-18° to 79°C) with dewpoint of supply air less than air temperature below 35°F (2°C).
Gauge Ports: 1/4" PTF

## Materials of Construction

R08:
- Body and Bonnet: Zinc
- Valve: Brass
- Elastomers: Nitrile
- Bottom Plug: Acetal

R12:
- Body: Zinc
- Bonnet: Aluminum
- Valve: Brass
- Elastomers: Nitrile
- Bottom Plug: Nylon

R17:
- Body, Bonnet, Bottom Plug: Aluminum
- Valve: Aluminum and Nylon
- Elastomers: Nitrile

## Graphic Symbols

Relieving Regulator

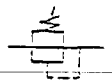

Nonrelieving Regulator



Confidential Treatment Requested by Transocean Holdings LLC TRN-HCEC-00002176

CONFIDENTIAL TRN-MDL-00043913

# Performance Curves

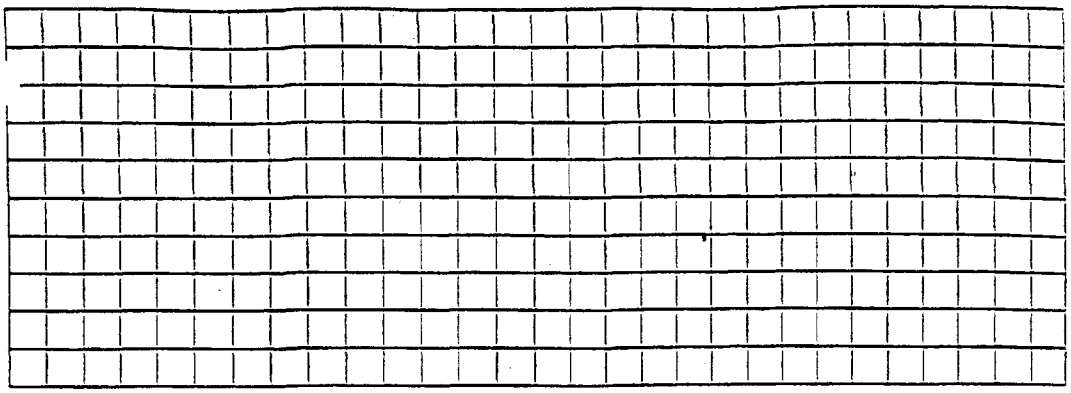

R08 Flow Curve
FLUID: COMPRESSED AIR
PORT SIZE: 3/8"
INLET PRESSURE: 150 psig
OUTLET PRESSURE ADJUSTMENT RANGE: 5 to 150 psig

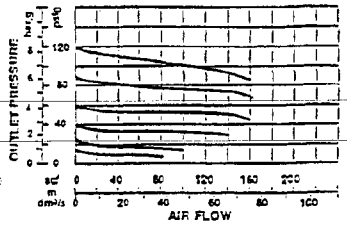


R12 Flow Curve
FLUID: COMPRESSED AIR
PORT SIZE: 1/2"
INLET PRESSURE: 150 psig
OUTLET PRESSURE ADJUSTMENT RANGE: 5 to 125 psig

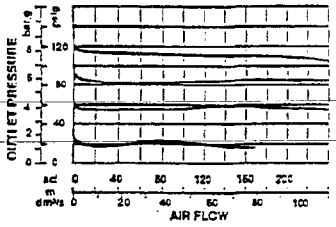


R17 Flow Curve
FLUID: COMPRESSED AIR
PORT SIZE: 1"
INLET PRESSURE: 150 psig
OUTLET PRESSURE ADJUSTMENT RANGE: 5 to 150 psig

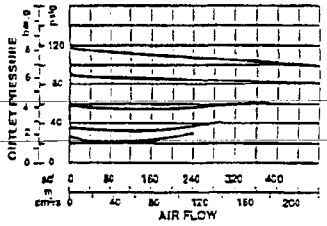


R08 Regulation Curve
FLUID: COMPRESSED AIR
PORT SIZE: 3/8"
A: 10% MAXIMUM RECOMMENDED FLOW
B: 100% MAXIMUM RECOMMENDED FLOW
C: 200% MAXIMUM RECOMMENDED FLOW

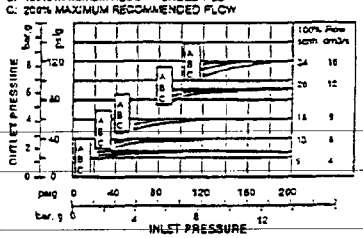


R12 Regulation Curve
FLUID: COMPRESSED AIR
PORT SIZE: 1/2"
A: 10% MAXIMUM RECOMMENDED FLOW
B: 100% MAXIMUM RECOMMENDED FLOW
C: 200% MAXIMUM RECOMMENDED FLOW

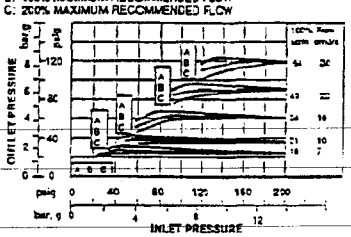


R17 Regulation Curve
FLUID: COMPRESSED AIR
PORT SIZE: 1"
A: 10% MAXIMUM RECOMMENDED FLOW
B: 100% MAXIMUM RECOMMENDED FLOW
C: 200% MAXIMUM RECOMMENDED FLOW

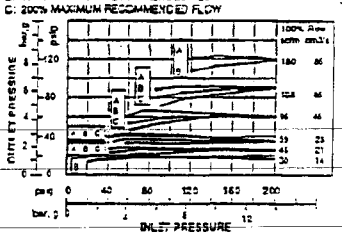




Confidential Treatment Requested by Transocean Holdings LLC TRN-HCEC-00002177

CONFIDENTIAL TRN-MDL-00043914

# Warning/Warranty

## Warning

These products are intended for use in industrial compressed air systems only. Do not use these products where pressures and temperatures can exceed those listed under Specifications.

Before using these products with fluids other than those specified, for nonindustrial applications, life-support systems, or other applications not within published specifications, consult NORGREN.

Through misuse, age, or malfunction, components used in fluid power systems can fail in various modes. The system designer is warned to consider the failure modes of all component parts used in fluid power systems and to provide adequate safeguards to prevent personal injury or damage to equipment in the event of such failure modes.

System designers must provide a warning to end users in the system instructional manual if protection against a failure mode cannot be adequately provided.

System designers and end users are cautioned to review specific warnings found in instruction sheets packed and shipped with these products.

It should be recognized that warnings are valid for any product, regardless of manufacturer, and are not restricted to products manufactured by NORGREN. NORGREN'S reputation for product quality and performance is well established. We feel we have the additional obligation to provide information or warnings to customers to assist them in applying our products in a reasonable and safe manner.

## Limited Warranty, Disclaimer & Limitation of Remedies

Items sold by NORGREN are warranted to be free from defects in materials and workmanship for a period of two years from the date of manufacture, provided said items are used according to NORGREN'S recommended usages. NORGREN'S liability is limited to the repair of, refund of purchase price paid for, or replacement in kind of, at NORGREN'S sole option, any items proved defective, provided the allegedly defective items are returned to NORGREN prepaid. The warranties expressed above are in lieu of and exclusive of all other warranties.

**There are no other warranties, expressed or implied, except as stated herein. There are no implied warranties of merchantability or fitness for a particular purpose, which are specifically disclaimed. NORGREN'S liability for breach of warranty as herein stated is the exclusive remedy, and in no event shall NORGREN be liable or responsible for incidental or consequential damages, even if the possibility of such incidental or consequential damages has been made known to NORGREN.**

NORGREN reserves the right to discontinue manufacture of any product or change product materials, design, or specifications without notice.

NORGREN

5400 South Delaware St. Littleton, CO 80120-1663
PHONE 303/794-2611 TELEX 45-5641 INTL TELEX 45-0200
FAX 303/795-6487
PRINTED IN U.S.A.

IMI

NC-272/1-90

Confidential Treatment Requested by Transocean Holdings LLC TRN-HCEC-00002178

CONFIDENTIAL TRN-MDL-00043915

# R01, R11, R12, R17 DESIGNER SERIES COMPRESSED AIR REGULATORS

## OPERATION

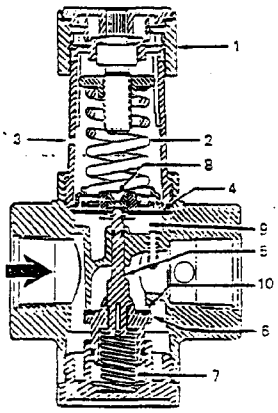

TYPE R17

A regulator is used in a compressed air system to maintain a nearly constant outlet pressure despite changes in the inlet air pressure and changes in downstream flow requirements.

Outlet pressure is controlled by adjustment (1). Clockwise rotation increases and counterclockwise rotation decreases outlet pressure setting. When the adjustment (1) is rotated fully counterclockwise, no force is applied to the regulating spring (2), and the valve (6) is held closed by the valve spring (7). Clockwise rotation of the adjustment (1) compresses the regulating spring (2) which applies a downward force on top of the diaphragm (4). The diaphragm (4) and valve pin (5) move downward forcing valve (6) off its seat (10) which allows air to flow through the regulator to the downstream system.

Outlet pressure increases in the downstream system and sensing chamber (9) and applies an upward force on bottom of the diaphragm (4). The diaphragm (4), valve pin (5), and valve (6) move upward, compressing the regulating spring (2). Upward movement stops when the forces below the diaphragm balance the forces above the diaphragm. When there is no downstream flow demand, the balance of forces occurs with the valve (6) closed. When there is downstream flow demand, the balance of forces occurs when the valve opens sufficiently to compensate for demand, thus maintaining the desired outlet pressure.

RELIEVING TYPE REGULATORS. With relieving regulators, outlet pressure can be reduced even though the system is dead-ended. When the adjustment (1) is turned counterclockwise, the force on the regulating spring (2) is reduced, and air pressure in the sensing chamber (9) moves the diaphragm (4) upward. This upward movement opens the relief passage (8) in the diaphragm and allows air to escape from the outlet side of the regulator through the relief passage (8) and vent (3) to atmosphere. As the outlet pressure decreases to the reduced pressure setting, the diaphragm moves downward and closes the relief passage.

The diaphragm will likewise move upward in response to an increase in outlet pressure above the regulator setting, allowing air to escape to the atmosphere as described above. However, the flow capacity of the relief passage is limited, and depending upon the source of the overpressure condition, the outlet pressure might increase to a point significantly higher than the regulator setting. For this reason, the relief feature of a regulator must not be relied upon as an overpressure safety device. See WARNING note.

NONRELIEVING TYPE REGULATORS. With nonrelieving regulators, outlet pressure can not be reduced if the system is dead-ended. The nonrelieving type regulator is identical to the relieving type with the exception of the diaphragm, which is not equipped with relief passage (8). This type of regulator will not vent the outlet air as described under "RELIEVING TYPE REGULATORS" and some other means of relieving the outlet air pressure must be provided.

## SPECIFICATIONS

NIP-272
November, 1983
Supersedes April, 1982

RATED OPERATING CONDITIONS –
- INLET PRESSURE: 300 psig (20.7 bar) maximum
- TEMPERATURE: 0° to 175°F (–18° to 79°C) with dew-point less than air temperature below 35°F (2°C).

FLUID: Compressed air

MAIN PORTS –
- STANDARD –
  - R01 & R11: 1/4", 3/8" PTF
  - R12: 1/2", 3/4" PTF
  - R17: 3/4", 1", 1-1/4", 1-1/2" PTF
- OPTIONAL –
  - R01 & R11: G 1/4, G 3/8 ISO
  - R12: G 1/2 ISO
  - R17: G 3/4, G 1, G1-1/4 ISO

GAUGE PORTS –
- STANDARD: 1/4" PTF
- OPTIONAL: G 1/4 ISO

TYPE –
- STANDARD: Relieving diaphragm
- OPTIONAL: Nonrelieving diaphragm

OUTLET PRESSURE ADJUSTMENT RANGES* –
- STANDARD: 5 TO 125 psig ( .3 TO 8.6 bar)
- OPTIONAL: 5 TO 50 psig ( .3 TO 3.5 bar)
- OPTIONAL: 15 TO 250 psig (1.0 TO 17.2 bar)

MATERIALS OF CONSTRUCTION –
- Body –
  - Type R01, R11, R12 ..... Aluminum or Zinc
  - Type R17 ..... Aluminum
- Bonnet ..... Aluminum or Zinc
- Bottom Plug –
  - Type R01, R11, R12 ..... Nylon
  - Type R17 ..... Aluminum or Zinc
- Valve Assembly –
  - Type R01, R11 ..... Brass
  - Type R12 ..... Brass & Acetal Resin
  - Type R17 ..... Aluminum & Nylon
- Elastomers ..... Buna-N

*Outlet pressure adjustment ranges are not minimum or maximum outlet pressure limits. Regulators can be adjusted to zero psig outlet pressure and, generally, to pressures in excess of those specified. The use of these regulators to control pressures outside of the specified ranges is not recommended.

SEE NC-41 OR NC-272 FOR ORDERING INFORMATION AND MODEL NUMBERING SYSTEM.

## WARNING

THESE REGULATORS ARE INTENDED FOR USE IN INDUSTRIAL COMPRESSED AIR SYSTEMS ONLY. DO NOT USE THESE REGULATORS WHERE PRESSURE OR TEMPERATURE CAN EXCEED RATED OPERATING CONDITIONS. SEE SPECIFICATIONS.

IF OUTLET PRESSURE IN EXCESS OF THE REGULATOR PRESSURE SETTING COULD CAUSE DOWNSTREAM EQUIPMENT TO RUPTURE OR MALFUNCTION, INSTALL A PRESSURE RELIEF DEVICE DOWNSTREAM OF THE REGULATOR. THE RELIEF PRESSURE AND FLOW CAPACITY OF THE RELIEF DEVICE MUST SATISFY SYSTEM REQUIREMENTS.

THE ACCURACY OF THE INDICATION OF PRESSURE GAUGES CAN CHANGE, BOTH DURING SHIPMENT (DESPITE CARE IN PACKAGING) AND DURING THE SERVICE LIFE. IF A PRESSURE GAUGE IS TO BE USED WITH THESE PRODUCTS AND IF INACCURATE INDICATIONS MAY BE HAZARDOUS TO PERSONNEL OR PROPERTY, THE GAUGE SHOULD BE CALIBRATED BEFORE INITIAL INSTALLATION AND AT REGULAR INTERVALS DURING USE. FOR GAUGE STANDARDS REFER TO ANSI B40.1-1974.

BEFORE USING WITH FLUIDS OTHER THAN AIR, FOR NONINDUSTRIAL APPLICATIONS, OR FOR LIFE SUPPORT SYSTEMS CONSULT C. A. NORGREN CO.

NORGREN®

LITTLETON, COLORADO

©1983, C. A. NORGREN CO.

Confidential Treatment Requested by Transocean Holdings LLC TRN-HCEC-00002179

CONFIDENTIAL TRN-MDL-00043916

## INSTALLATION

1. Install a regulator as close as possible to the device being serviced. Regulator can be installed at any angle.
2. In systems with a cyclic demand, install regulator upstream of cycling control valves.
3. System piping should be same size as regulator ports.
   Connect piping to proper ports using pipe thread sealant on male threads only. Do not allow sealant to enter interior of regulator. Flow must be in same direction as arrow on regulator body.
5. If desired, connect an outlet pressure gauge to one of the gauge ports. Gauge ports can also be used as additional outlets. Plug unused ports.
6. Install a filter upstream of the regulator.

## ADJUSTMENT

1. Before turning on system air pressure, turn regulator adjustment counterclockwise until all load is removed from regulating spring.
2. Turn on system air pressure.
3. Turn regulator adjustment clockwise until the desired outlet pressure is reached.
4. To avoid minor readjustment after making a change in pressure setting, always approach the desired pressure from a lower pressure. When reducing from a higher to a lower setting, first reduce to some pressure less than that desired, then bring up to the desired point.
5. On models with a T-handle, tighten jam nut to lock pressure setting.
6. On models with an adjusting knob, push lockring on adjusting knob downward to lock pressure setting. To release, pull lockring upward. Pressure setting can be made tamper resistant by installing a seal wire (see Accessories) in groove above lockring.

## DISASSEMBLY

1. Shut off inlet pressure and reduce pressure in inlet and outlet lines to zero.
2. Turn adjusting knob or T-handle counterclockwise until all load is removed from spring (5). Regulator can be disassembled without removal from air line.
3. Unscrew bonnet (2 or 3) and remove optional panel mounting nut (1), upper spring rest (4, T-handle adjustment only), regulating spring (5), slip ring (6), and diaphragm (7).
4. Unscrew bottom plug (16) and remove O-ring (15), valve spring (14), valve and valve stem (12, 18), and O-rings (11, 13).

## CLEANING

1. Clean parts using warm water and soap. Do not submerge knob type bonnets (2) in cleaning solution as lubricant will be removed.
2. Rinse all parts and dry thoroughly.
3. Inspect all parts.
4. Replace worn or damaged parts.

## REASSEMBLY

1. Prior to reassembly, lubricate the following items.

| ITEM | LUBRICANT |
|---|---|
| 11, 13, 15 (O-rings) and 16 (valve bore in bottom plug) | Wipe Coat of Dow Corning 44M grease (or equivalent) |
| 3 (adjusting screw threads and screw tip) and 2 (adjusting screw threads) | Small, even coat of Lubriplate 110 (or equivalent) |
| 3, 2 (bonnet threads) and 16 (threads on metal bottom plugs) | Small, even coat of Armite Laboratories anti-seize compound Lect-Plate 250 (or equivalent) |

2. Assemble the regulator as shown in the appropriate illustration below. Tighten bottom plug (16) hand tight. Tighten bonnet assembly (2 or 3) to 25-to-30 foot-pounds (Type R01 and R11) or to 45-to-50 foot-pounds (Type R12 and R17).

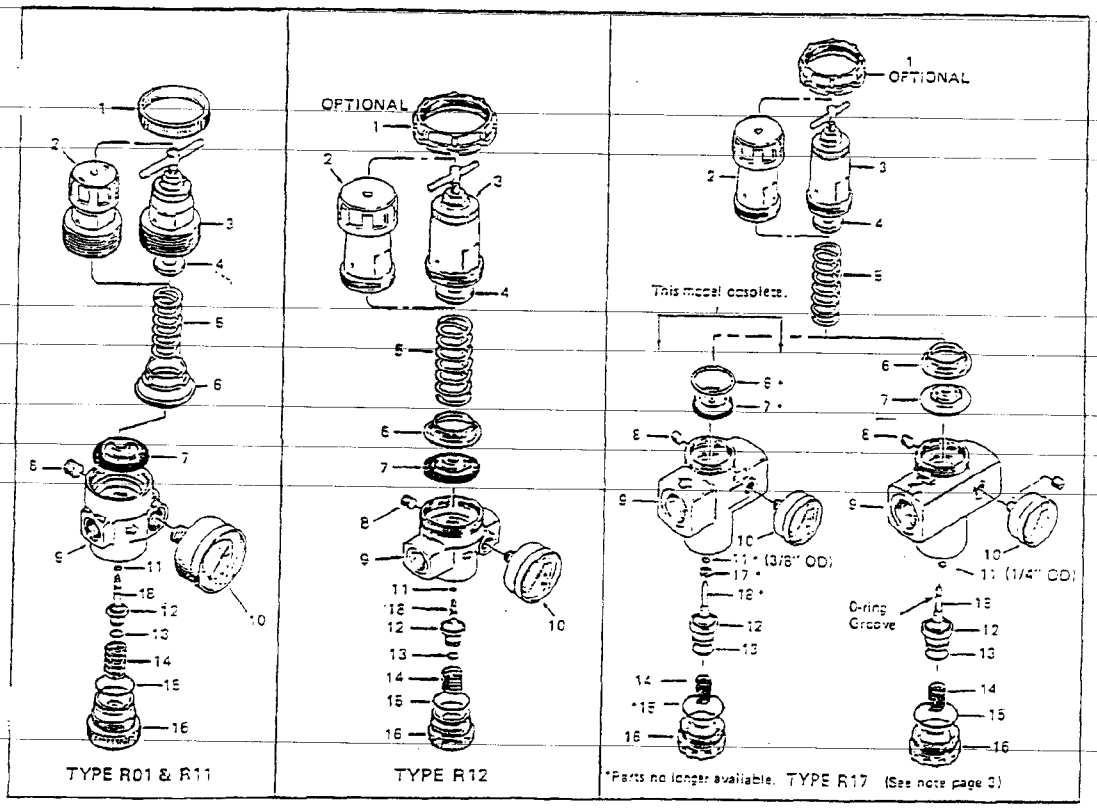


TYPE R01 & R11 | TYPE R12 | *Parts no longer available. TYPE R17 (See note page 3)

Confidential Treatment Requested by Transocean Holdings LLC TRN-HCEC-00002180

CONFIDENTIAL TRN-MDL-00043917

## REPAIR KIT INSTALLATION

Repair kits are universal and may contain parts not used on your regulator. When installing a repair kit, always replace used parts with identical parts from the kit. Discard kit parts not used on your regulator.

## REPAIR KITS

| Regulator Type | Relieving | Non Relieving |
|---|---|---|
| R01 & R11 (items 7, 11, 18, 12, 13, 14, 15) | 5298-02 | 5298-01 |
| R12 (items 7, 11, 18, 12, 13, 14, 15) | 5550-08 | 5550-07 |
| R17 (items 7, 11, 18, 12, 13, 14, 15) | 5578-02 | 5578-01 |

## REPAIR PARTS

| | Type R01 & R11 | Type R12 | Type* R17 |
|---|---|---|---|
| Regulating spring (item 5) | | | |
| 5 to 50 psig (green) | 5302-02 | 5291-01 | 5291-01 |
| 5 to 125 psig (yellow) | 5354-02 | 5219-01 | 5219-01 |
| 15 to 250 psig (black) | 5195-01 | 5220-01 | 5220-01 |
| Diaphragm assembly (item 7) | | | |
| Relieving | 5083-57 | 5228-56 | 5228-56 |
| Nonrelieving | 5083-58 | 5228-57 | 5228-57 |
| Valve assembly (items 11, 12, 13, 18) | 5160-50 | 5206-51 | 5258-52 |

* WARNING NOTE
In September, 1978 the R17 type regulator design was changed internally and, as a result, several parts are no longer interchangeable with models manufactured before that date. In the interest of safety, before attempting to replace any parts, contact your Norgren distributor for information.

## DIMENSIONS

All dimensions in inches (mm).

## ACCESSORIES

| | Type R01 & R11 | Type R12 | Type R17 |
|---|---|---|---|
| Wall mounting bracket | 5203-05 | 5514-06* | 5570-04* |
| Plastic panel mounting nut (item 1) | Standard | 5226-89 | 5226-89 |
| Metal panel mounting nut (item 1) | 5191-01 | 5226-97 | 5226-97 |
| Tamper resistant seal wire (knob adjustment only) | 2117-01 | 2117-01 | 2117-01 |

*Includes 5226-89 plastic mounting nut.

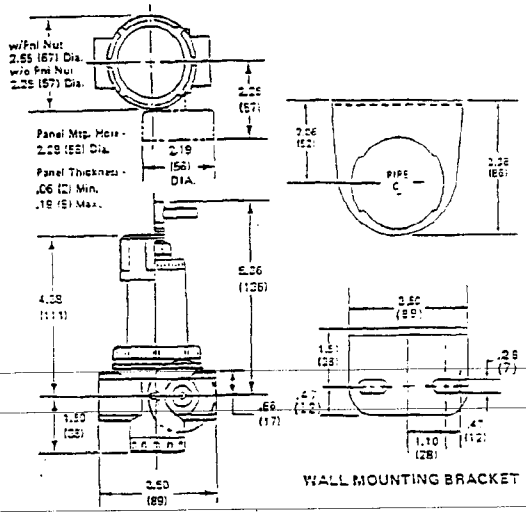


TYPE R12

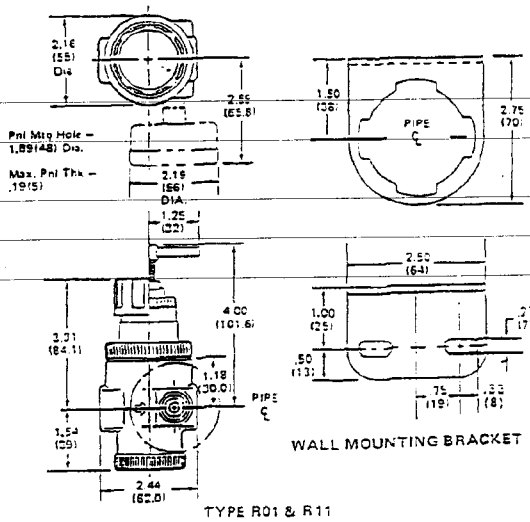


TYPE R01 & R11

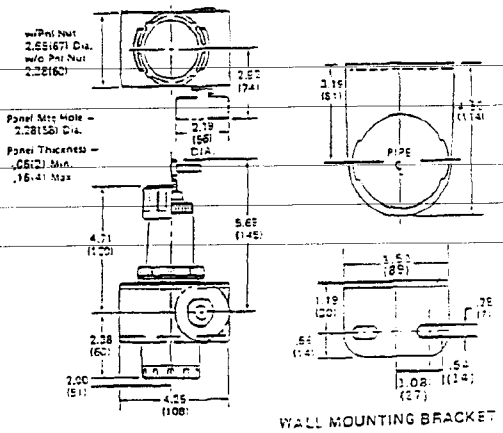


TYPE R17

**C. A. NORGREN CO.**
LITTLETON, COLORADO 80120 / 303-794-2611
Printed in U.S.A.

N1P-272/11-82

Confidential Treatment Requested by Transocean Holdings LLC TRN-HCEC-00002181

CONFIDENTIAL TRN-MDL-00043918

Confidential Treatment Requested by Transocean Holdings LLC



CONFIDENTIAL

## APPENDIX 9

*Hot Line Hose Reel*
COMPONENT DESCRIPTION

*Reference Item No.:* 13

*Quantity Required:* 1 per reel

*Description:* Air Lubricator

*Manufacturer:* Norgren

*Part Number:* L17-800-NPDA, 1" FNPT

*Source:* Houston, Texas

Air-Dreco
1833 Joanna
Houston, Texas 77055

Telephone: 713-681-4601
Telefax: 713-681-1216

Manufacturer

C. A. Norgren Company
5400 South Delaware
Littleton, Colorado 80120-1663

Telephone: 303-794-2611
Telefax: 303-798-4856



Confidential Treatment Requested by Transocean Holdings LLC TRN-HCEC-00002183

CONFIDENTIAL TRN-MDL-00043920

# NORGREN Designer™ Series L08, L12 & L17 Compressed Air Micro-Fog® Tool Lubricators

NC-360
February 1990
Supersedes October 1987

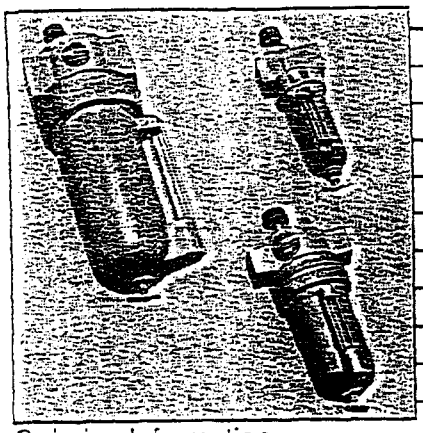

NORGREN Micro-Fog Tool Lubricators are used in industrial compressed air systems to lubricate air tools, cylinders, valves, air motors, or other air-driven devices. They inject a finely divided "fog" of oil into the air stream and can be used in systems containing complex piping or multiple points of lubrication. Micro-Fog Lubricators should not be located downstream of frequently cycling directional control valves. Bidirectional Oil-Fog Lubricators should be used under such conditions (see NC-361).

## Ordering Information

| Type | Port Size PTF | Recommended Flow Range* scfm | (dm3/s) | Standard Reservoir Size | Metal Reservoir With Drain and Sight Glass | MODEL NUMBERS Transparent Polycarbonate Reservoir With Drain | Transparent Polycarbonate Reservoir With Guard & Drain |
|---|---|---|---|---|---|---|---|
| L08 | 1/4 | 2.5 to 20 | (1.2 to 9.5) | 1/3-pt. | L08-200-MPDA | L08-200-MPCA | — |
| | 3/8 | 2.5 to 40 | (1.2 to 19.0) | 1/3-pt. | L08-300-MPDA | L08-300-MPCA | — |
| | 1/2 | 2.5 to 40 | (1.2 to 19.0) | 1/3-pt. | L08-400-MPDA | L08-400-MPCA | — |
| L12 | | L12 IS OBSOLETE. REPLACED WITH L74M. SEE NORGREN CATALOG NCA-33. | | | | | |
| L17 | 3/4 | 8.0 to 160 | (3.8 to 75.5) | 1-qt. | L17-600-MPDA | — | — |
| | 1 | 8.0 to 275 | (3.8 to 129.8) | 1-qt. | L17-800-MPDA | — | — |
| | 1-1/4 | 8.0 to 275 | (3.8 to 129.8) | 1-qt. | L17-A00-MPDA | — | — |
| | 1-1/2 | 8.0 to 275 | (3.8 to 129.8) | 1-qt. | L17-B00-MPDA | — | — |

*At 100 psig (6.9 bar) inlet pressure and 5 psid.

## Features

- Flow sensor design provides a nearly constant oil/air ratio over a wide range of air flows.
- All around (360°) visibility of the sight-feed dome simplifies installation and adjustment.
- Simple knob type, oil-feed control with integral sight-feed dome permits fine adjustment of oil-feed rate to provide the proper degree of lubrication at the point of need.
- Final oil-feed adjustment is easily locked with integral push-pull locking ring on the control knob. Optional *Tamper Resistant Wire* can be installed to resist unauthorized adjustment.
- Can be filled under pressure with the use of the optional *Quick Fill Cap* or *Remote Fill Device*.
- Optional *2- and 5-Gallon Reservoirs* for L12 and L17 lubricators are ASME rated to Section VIII of ASME Pressure Vessel Code.

## Accessories

| | Factory Installed | Field Installation |
|---|---|---|
| • Wall Mounting Brackets | | |
| L08 | — | 3783-52 |
| L12 (1/2 pt., 1-qt., 2-qt. Rsvr.) | — | 5532-04 |
| L17 (1-qt. & 2-qt. Rsvr. with 3/4 or 1" ports) | — | 6212-50 |
| L17 (1-qt. & 2-qt. Rsvr. with 1-1/4" or 1-1/2" ports) | — | 6212-51 |
| L12 & L17 (2-gal. Reservoir) | — | 18-001-056 |
| L12 & L17 (5-gal. Reservoir) | — | 18-001-039 |
| • Tamper Resistant Wire** | — | 2117-01 |
| • Fill Plug with 1/8" Tapped Hole (L12 & L17 only) | — | 5301-52 |
| • Pyrex/Aluminum Sight Feed Dome | | |
| L08 | 5605-54 | 5605-50 |
| L12, L17 | 5605-61† | 5605-60† |
| • Aluminum Fill Plug | | |
| L08 | Standard | Standard |
| L12, L17 | 5301-02 | 5301-50 |
| • Quick Fill Cap | | |
| L08 | 18-011-025 | 18-011-024 |
| L12, L17 | 18-011-020 | 18-011-021 |
| • Remote Fill Device | | |
| L08 (1/3-pt. Rsvr.) & L12 (1/2-pt Rsvr.) | Consult Factory | See NC-809 |
| • Low Oil Level Switch | | |
| L12 (1-qt. Rsvr.) | 18-023-601 | 18-023-602 |
| (2-qt. Rsvr.) | 18-023-603 | 18-023-604 |
| (2-gal. Rsvr.) | 18-023-605 | 18-023-606 |
| (5-gal. Rsvr.) | 18-023-607 | 18-023-608 |
| L17 (2-qt. Rsvr.) | 18-023-611 | 18-023-612 |
| (2-gal. Rsvr.) | 18-023-613 | 18-023-614 |
| (5-gal. Rsvr.) | 18-023-615 | 18-023-616 |
| • High/Low Oil Level Switch | | |
| L12 (2-gal. Rsvr.) | 18-023-651 | 18-023-652 |
| (5-gal. Rsvr.) | 18-023-653 | 18-023-654 |
| L17 (2-gal. Rsvr.) | 18-023-655 | 18-023-656 |
| (5-gal. Rsvr.) | 18-023-657 | 18-023-658 |

** Will not fit optional *Pyrex/Aluminum Dome*.
† Includes optional *Aluminum Fill Plug*.

## Options

Note the model number in the preceding order table that comes closest to the desired unit. Change the model number as shown in the following diagram to obtain the desired option.

Position in Model Number

1 2 3 4 5 6 7 8 9 10

L | X | X – X | X | X – X | X | X | X

RESERVOIR OPTIONS

| | |
|---|---|
| S | 3-oz. Trans. Drain, No Guard (L08 only) |
| G | 1-qt. Metal, Drain, Sight Glass (L12 only) |
| H | 2-qt. Metal, Drain, Sight Glass (L12, L17 only) |
| J | 2-gal. Metal, Drain, Sight Glass (L12, L17 only) |
| K | 5-gal. Metal, Drain, Sight Glass (L12, L17 only) |

G — ISO G ports. Not available on L12 with 3/4" ports and L17 with 1-1/2" ports.

## Repair Kits

L08 (O-rings, Gaskets, Flow Sensor): 5324-02
L12 (O-rings, Gaskets): 5771-01
L17 (O-rings, Gaskets): 5771-02

NORGREN®

© NORGREN 1990

# Technical Data

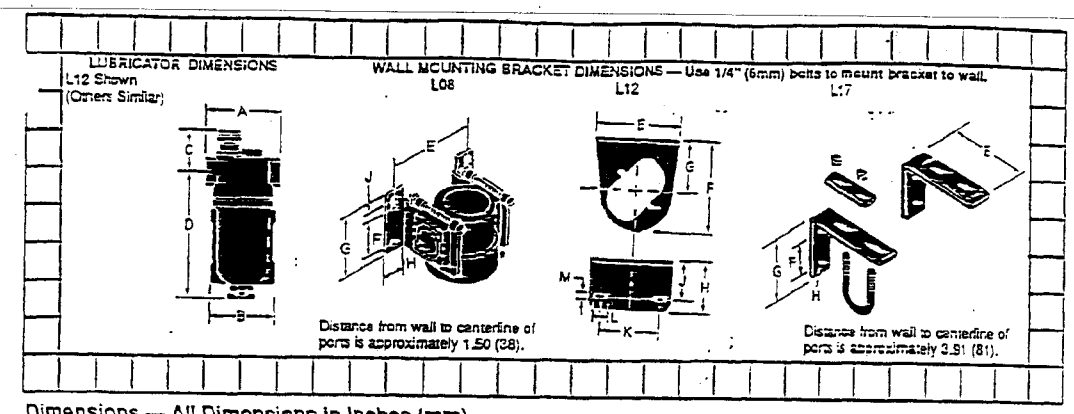


Dimensions — All Dimensions in Inches (mm).

| Type | A | E Max. Dia. | C Std. Dome | C Pyrex Dome | D | E | F | G | H | J | K | L | M |
|---|---|---|---|---|---|---|---|---|---|---|---|---|---|
| L08 | 2.75 (70) | 2.68 (68) | 2.03 (52) | 2.74 (70) | 6.08 (154) | 3.56 (90) | 1.50 (38) | 2.40 (61) | 0.27 (6) Dia. | 0.25 (6) | — — | — — | — — |
| L12 | * | 3.50 (90) | 1.88 (48) | 2.56 (65) | 6.69 (170) | 3.50 (89) | 3.69 (94) | 2.06 (52) | 1.96 (50) | 1.50 (38) | 2.52 (64) | 0.64 (16) | 0.28 (7) |
| L17 | 4.50 (114) | 5.52 (140) | 2.22 (56) | 2.92 (74) | 10.24 (260) | 5.13 (130) | 1.69 (43) | 3.00 (76) | 0.34(9) Dia. | — — | — — | — — | — — |

* 2.56 (65) for lubricators with 1/4" and 3/8" ports.
3.91 (99) for lubricators with 1/2" and 3/4" ports.

## Specifications

Maximum Inlet Pressure:
Transparent Bowl: 150 psig (10.3 bar)
Metal Bowl: 250 psig (17.2 bar)
Maximum Temperature:
Transparent Bowl: 125°F (52°C)
Metal Bowl: 175°F (79°C)
Recommended Lubricants: Use a misting type oil rated 50 to 200 SSU (ISO Grade 7 to 46) at 100°F (38°C). The oils used must be compatible with materials of construction. Contact your lubricant supplier and the builder of the equipment to be lubricated to obtain specific lubricant recommendations.

## Materials of Construction

Body:
L08, L12: Zinc
L17: Aluminum
Reservoir:
Transparent: Polycarbonate
Metal:
L08, L12: Zinc
L17: Aluminum
Reservoir Sight Glass: Pyrex
Sight-Feed Dome:
Standard: Transparent Nylon
Optional: Pyrex & Aluminum
Elastomers: Neoprene and Nitrile
L08 Micro-Fog Capsule: Red Acetal

## Graphic Symbols

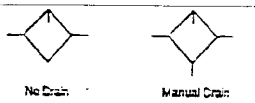




Confidential Treatment Requested by Transocean Holdings LLC TRN-HCEC-00002185

CONFIDENTIAL TRN-MDL-00043922

# Performance Curves

L08 Lubricator
PORT SIZE: 3/8"

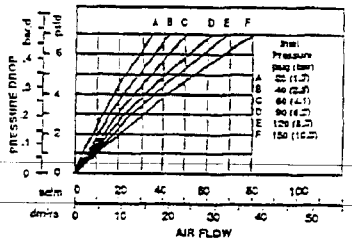


L12 Lubricator
PORT SIZE: 1/4"

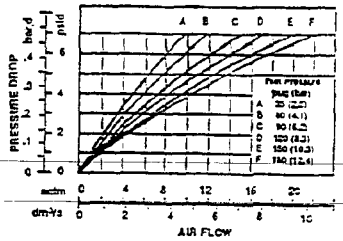


L17 Lubricator
PORT SIZE: 3/4"

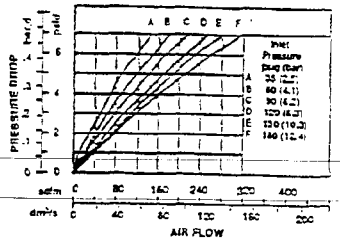


L12 Lubricator
PORT SIZE: 3/8"

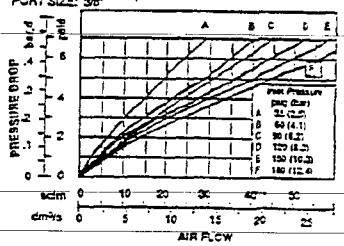


L17 Lubricator
PORT SIZE: 1", 1-1/4" & 1-1/2"

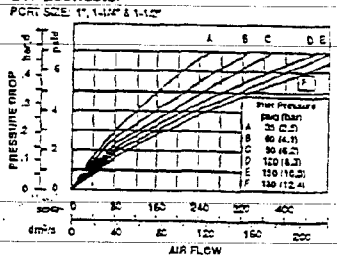


L12 Lubricator
PORT SIZE: 1/2" & 3/4"

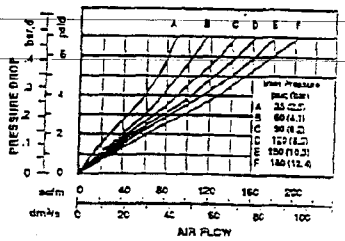




Confidential Treatment Requested by Transocean Holdings LLC

TRN-HCEC-00002186

CONFIDENTIAL

TRN-MDL-00043923

# Warning/Warranty

## Warning

These products are intended for use in industrial compressed air systems only. Do not use these products where pressures and temperatures can exceed those listed under Specifications.

Before using these products with fluids other than those specified, for nonindustrial applications, life-support systems, or other applications not within published specifications, consult NORGREN.

Through misuse, age, or malfunction, components used in fluid power systems can fail in various modes. The system designer is warned to consider the failure modes of all component parts used in fluid power systems and to provide adequate safeguards to prevent personal injury or damage to equipment in the event of such failure modes.

System designers must provide a warning to end users in the system instructional manual if protection against a failure mode cannot be adequately provided.

System designers and end users are cautioned to review specific warnings found in instruction sheets packed and shipped with these products.

It should be recognized that warnings are valid for any product, regardless of manufacturer, and are not restricted to products manufactured by NORGREN. NORGREN'S reputation for product quality and performance is well established. We feel we have the additional obligation to provide information or warnings to customers to assist them in applying our products in a reasonable and safe manner.

## Limited Warranty, Disclaimer & Limitation of Remedies

Items sold by NORGREN are warranted to be free from defects in materials and workmanship for a period of two years from the date of manufacture, provided said items are used according to NORGREN'S recommended usages. NORGREN'S liability is limited to the repair of, refund of purchase price paid for, or replacement in kind of, at NORGREN'S sole option, any items proved defective, provided the allegedly defective items are returned to NORGREN prepaid. The warranties expressed above are in lieu of and exclusive of all other warranties.

**There are no other warranties, expressed or implied, except as stated herein. There are no implied warranties of merchantability or fitness for a particular purpose, which are specifically disclaimed. NORGREN'S liability for breach of warranty as herein stated is the exclusive remedy, and in no event shall NORGREN be liable or responsible for incidental or consequential damages, even if the possibility of such incidental or consequential damages has been made known to NORGREN.**

NORGREN reserves the right to discontinue manufacture of any product or change product materials, design, or specifications without notice.

NORGREN

5400 South Delaware St. Littleton, CO 80120-1663
PHONE 303/794-2611 TELEX 45-0541 INTL TELEX
FAX 303/795-9428
PRINTED IN U.S.A.

IMI

NC-360/2-90

Confidential Treatment Requested by Transocean Holdings LLC TRN-HCEC-00002187

CONFIDENTIAL TRN-MDL-00043924

Confidential Treatment Requested by Transocean Holdings LLC



CONFIDENTIAL